Maintenance

Caddy Kasten/Kombi 1996 ➤
Polo Classic 1996 ➤
Polo Variant 1998 ➤

Edition 03.2018

Protected by copyright. Copying for private or commercial purposes, in part or in whole, is not permitted unless authorised by Volkswagen AG. Volkswagen AG does not guarantee or accept any liability with respect to the correctness of information in this document. Copyright by Volkswagen AG.

satelettronica

Maintenance

Heading

1. Engine list
2. Service work
3. General information
4. Descriptions of work:
5. Exhaust emissions test
6. Glossary

satelettronica

Protected by copyright. Copyright by Volkswagen AG. Copyright by Volkswagen AG. Volkswagen AG does not guarantee or accept any liability with respect to the correctness of information in this document. Copyright by Volkswagen AG. Copying for commercial purposes, in part or in whole, is not permitted unless authorised by Volkswagen AG.

Technical information should always be available to the foremen and mechanics, because their careful and constant adherence to the instructions is essential to ensure vehicle road-worthiness and safety. In addition, the normal basic safety precautions for working on motor vehicles must, as a matter of course, be observed.

All rights reserved.
No reproduction without prior agreement from publisher.

Copyright © 2018 Volkswagen AG, Wolfsburg

Contents

1	**Engine list**	**1**
2	**Service work**	**6**
2.1	Service tables	6
2.2	Oil change service	7
2.3	Inspection service	9
2.4	Additional work based on time or distance	14
2.5	Delivery inspection	16
3	**General information**	**19**
3.1	Raising vehicle with lifting platform and trolley jack	19
3.2	Connecting vehicle diagnostic tester	20
3.3	Vehicle data sticker	23
3.4	Engine code and engine number	23
3.5	Vehicle identification number	24
3.6	Type plate	24
3.7	Countries where diesel has a high sulphur content	24
3.8	RME fuel (biodiesel)	25
3.9	Attaching “Your next service” sticker	26
4	**Descriptions of work:**	**27**
4.1	Removing and installing engine compartment cover (noise insulation)	28
4.2	Driver and front passenger airbags: visual check of airbag units	28
4.3	Self-diagnosis: reading fault memories of all systems	30
4.4	Service interval display: resetting	34
4.5	Door arrester and securing pins: lubricating	53
4.6	Sunroof: checking function, cleaning and greasing guide rails	54
4.7	Electric windows: initialising	54
4.8	Clock: setting to correct time	54
4.9	Radio: activating anti-theft coding	55
4.10	Window wash/wipe system and headlight washer system: checking function and settings	56
4.11	Windscreen wiper blades: checking park position, if wiper blades judder: checking setting angle	61
4.12	Wheel securing bolts: tightening to specified torque	64
4.13	Tyres: checking condition, wear pattern, inflation pressure, tread depth	66
4.14	Engine oil level: checking	71
4.15	Engine oil: Draining or extracting and replenishing; renewing oil filter	72
4.16	Engine and components in engine compartment: inspecting for leaks and damage (from above and below)	76
4.17	V-belt: checking condition and tensioning	77
4.18	Poly V-belt: checking condition and tensioning belt	78
4.19	Boots: inspecting	80
4.20	Manual gearbox/final drive: checking oil level	80
4.21	Automatic gearbox: checking final drive oil level	82
4.22	Brake system: inspecting for leaks and damage	83
4.23	Front and rear brake pads/linings: checking thickness	83
4.24	Underbody protection: visual check for damage	86
4.25	Track rod ends: checking clearance, firm seating and boots	86
4.26	Swivel joints: inspecting	87
4.27	Cooling system: checking coolant level and frost protection	87
4.28	Spark plugs: renewing	89
4.29	Dust and pollen filter: renewing filter element	95
4.30	Camshaft drive belt: checking (petrol engine)	97
4.31	Toothed belt: checking for wear (SDI/TDI engines ►2000)	98
4.32	Camshaft drive toothed belt: checking condition and tension (diesel engine with engine code ALH and automatic gearbox)	99

Protected by copyright. Copying for private or commercial purposes, in part or in whole, is not permitted unless authorised by Volkswagen AG. Volkswagen AG does not guarantee or accept any liability with respect to the correctness of information in this document. Copyright by Volkswagen AG.
satelettronica

4.33 Toothed belt: checking condition and tension (diesel engine with engine code 1Y) 102
4.34 Toothed belt: renewing (diesel engine with engine codes AGP, AGR, ALH, AQM, ASK, ASV and AYQ) 105
4.35 Toothed belt: renewing (diesel engine with engine codes AEY, AFN, AHB, AHU, AKW and ALE) 105
4.36 Air filter: cleaning housing and renewing filter element 106
4.37 Fuel filter: renewing (diesel engine) 111
4.38 Fuel filter: draining water (diesel engine) 112
4.39 Automatic gearbox: checking ATF level 112
4.40 Power assisted steering: checking fluid level 119
4.41 Changing brake fluid 120
4.42 Brake fluid level (dependent upon brake pad/lining wear): checking 123
4.43 Battery: checking battery terminal clamps for secure seating 124
4.44 Battery: checking 126
4.45 Idling speed: checking 126
4.46 Headlight adjustment: checking 126
4.47 Carry out road test 130
5 Exhaust emissions test 131
5.1 Exhaust emissions test for vehicles with petrol engine without OBD with Fehlerauslesegerät V.A.G. 1551 131
5.2 Exhaust emissions test for vehicles with petrol engine without OBD with emissions testing station VAS 6300 142
5.3 Exhaust emissions test for vehicles with petrol engine and OBD 151
5.4 Exhaust emissions test for diesel engines without OBD 153
6 Glossary 169

Protected by copyright. Copying for private or commercial purposes, in part or in whole, is not permitted unless authorised by Volkswagen AG. Volkswagen AG does not guarantee or accept any liability with respect to the correctness of information in this document. Copyright by Volkswagen AG.
satelettronica

1 Engine list

(VIGG001140; Edition 03.2018)

This chapter provides information on the following subjects:

- Petrol engines ⇒ page 1
- Diesel engines ⇒ page 3

Note

To ease the search for an engine, the engine codes are listed in alphabetical order.

Petrol engines

1) Unleaded RON 91 also permitted, but with reduced output.

2) Austria: Reduced output by a baffle in catalytic converter

Engines →	Petrol engine	Petrol engine	Petrol engine	Petrol engine
Displacement l	1.8	1.6	1.6	1.4
Engine code	**ADZ**	**AEE**	**AEH**	**AEX**
No. of cylinders/valves per cylinder	4/2	4/2	4/2	4/2
Power kW at rpm	66/5500	55/4800	74/5600	44(40[2)] [2])/4700
Torque Nm at rpm	145/2500	135/2800 to 3600	145/3800	116/2800 to 3200 (116/3000[2)] [2])
Bore ∅ mm	81.0	75.0	81.0	76.5
Stroke mm	86.4	86.9	77.4	75.6
Compression ratio	10.0	9.8	10.3	10.2
Injection/ignition	Mono-Motronic	1AV	Simos 2.2	Motronic MP 9.0
RON min.	95 super unleaded [1)] [1]	95 super unleaded [1)] [1]	95 super unleaded [1)] [1]	95 super unleaded [1)] [1]
Exhaust emissions fulfil	-	-	EU 2	-
EPC system	no	no	no	no
Self-diagnosis	yes	yes	yes	yes
Catalytic converter	yes	yes	yes	yes
Lambda regulation	yes	yes	yes	yes
Exhaust gas recirculation	no	no	no	no
Turbocharged	no	no	no	no

Engines →	Petrol engine	Petrol engine	Petrol engine	Petrol engine
Displacement l	1.6	1.4	1.6	1.4
Engine code	**AFT**	**AKK**	**AKL**	**AKV**
No. of cylinders/valves per cylinder	4/2	4/2	4/2	4/2
Power kW at rpm	74/5800	44/4700	74/5600	44/4700
Torque Nm at rpm	140/3500	120/3000	145/3800	116/2800 to 3200
Bore ∅ mm	81.0	76.5	81.0	76.5
Stroke mm	77.4	75.6	77.4	75.6
Compression ratio	10.3	10.4	10.3	10.2

satelettronica

Engines →	Petrol engine	Petrol engine	Petrol engine	Petrol engine
Displacement l	1.6	1.4	1.6	1.4
Engine code	**AFT**	**AKK**	**AKL**	**AKV**
Injection/ignition	Simos	Motronic ME 07/05/2010	Simos 2.2	Motronic MP 9.0
RON min.	95 super unleaded 1) 1	95 super unleaded 1) 1	95 super unleaded 1) 1	95 unleaded 1) 1
Exhaust emissions fulfil	-	EU 2	D3 standard	D3 standard
EPC system	no	yes	no	no
Self-diagnosis	yes	yes	yes	yes
Catalytic converter	yes	yes	yes	yes
Lambda regulation	yes	yes	yes	yes
Exhaust gas recirculation	no	no	no	no
Turbocharged	no	no	no	no

Engines →	Petrol engine	Petrol engine	Petrol engine	Petrol engine
Displacement l	1.6	1.4	1.4	1.4
Engine code	**ALM**	**ANW**	**ANX**	**APE**
No. of cylinders/valves per cylinder	4/2	4/2	4/2	4/4
Power kW at rpm	55/4800	44/4700	40/4700	55/5000
Torque Nm at rpm	135/2800 to 3600	120/3000	116/3000	126/3800
Bore ∅ mm	75.0	76.5	76.5	76.5
Stroke mm	86.9	75.6	75.6	75.6
Compression ratio	9.8	10.4	10.2	10.5
Injection/ignition	1 AV	Motronic ME 07/05/2010	Motronic MP 9.0	Motronic ME 07/05/2010
RON min.	95 super unleaded 1) 1	95 super unleaded 1) 1	95 super unleaded 1) 1	95 super unleaded 1) 1
Exhaust emissions fulfil	D3 standard	D4 standard	-	D4 standard
EPC system	no	yes	no	yes
Self-diagnosis	yes	yes	yes	yes
Catalytic converter	yes	yes	yes	yes
Lambda regulation	yes	yes	yes	yes
Exhaust gas recirculation	no	yes	no	yes
Turbocharged	no	no	no	no

Engines →	Petrol engine	Petrol engine	Petrol engine
Displacement l	1.6	1.4	1.4
Engine code	**APF**	**APQ**	**AQQ**
No. of cylinders/valves per cylinder	4/2	4/2	4/4
Power kW at rpm	74/5600	44/4700	74/6000
Torque Nm at rpm	145/3800	116/2800 to 3200	128/4500
Bore ∅ mm	81.0	76.5	76.5
Stroke mm	77.4	75.6	75.6
Compression ratio	10.3	10.2	10.5
Injection/ignition	Simos 3.3	Motronic MP 9.0	Magneti Marelli 4LV

Copyright. Copying for private or commercial purposes, in part or in whole, is not permitted unless authorised by Volkswagen AG. Volkswagen AG does not guarantee or accept any liability with respect to the correctness of information in this document.
satelettronica

Engines →	Petrol engine	Petrol engine	Petrol engine
Displacement l	1.6	1.4	1.4
Engine code	**APF**	**APQ**	**AQQ**
RON min.	95 super unleaded [1) 1]	95 super unleaded [1) 1]	95 super unleaded [1) 1]
Exhaust emissions fulfil	D4 standard	D3 standard	D4 standard
EPC system	yes	no	yes
Self-diagnosis	yes	yes	yes
Catalytic converter	yes	yes	yes
Lambda regulation	yes	yes	yes
Exhaust gas recirculation	no	no	no
Turbocharged	no	no	no

Engines →	Petrol engine	Petrol engine	Petrol engine	Petrol engine
Displacement l	1.4	1.4	1.6	1.6
Engine code	**AUA**	**AUD**	**AUR**	**1F**
No. of cylinders/valves per cylinder	4/4	4/2	4/2	4/2
Power kW at rpm	55/5000	44/4700	74/5600	55/5500
Torque Nm at rpm	126/3900	116/3000	145/3800	125/2600
Bore ∅ mm	76.5	76.5	81.0	81.0
Stroke mm	75.6	75.6	77.4	77.4
Compression ratio	10.5	10.4	10.3	9.0
Injection/ignition	Magneti Marelli 4LV	Motronic ME 07/05/2010	Simos 3.3	Mono-Motronic
RON min.	95 unleaded [1) 1]	95 unleaded [1) 1]	95 unleaded [1) 1]	91 unleaded
Exhaust emissions fulfil	EU4 standard	EU4 standard	EU4 standard	-
Exhaust emissions warning lamp	yes	yes	yes	no
EPC system	yes	yes	yes	yes
Self-diagnosis	yes	yes	yes	yes
Catalytic converter	yes	yes	yes	yes
Lambda regulation	yes	yes	yes	no
Exhaust gas recirculation	yes	no	no	no
Turbocharged	no	no	no	

Protected by copyright. Copyright by Volkswagen AG. Volkswagen AG does not guarantee or accept any liability with respect to the correctness of information in this document. Copyright by Volkswagen AG. Commercial purposes, in part or in whole, is not permitted unless authorised by Volkswagen AG.

satelettronica

Diesel engines

3) only France

Engines →	Diesel engine	Diesel engine	Diesel engine	Diesel engine
Displacement l	1.9	1.9	1.9	1.9
Engine code	**AEY**	**AFN**	**AGP**	**AGR**
No. of cylinders/valves per cylinder	4/2	4/2	4/2	4/2
Power kW at rpm	47/4200	81/4150	50/4200	66/4000
Torque Nm at rpm	125/2200 to 2800	235/1900	133/2200 to 2600	210/1900

Engines →	Diesel engine	Diesel engine	Diesel engine	Diesel engine
Displacement l	1.9	1.9	1.9	1.9
Engine code	**AEY**	**AFN**	**AGP**	**AGR**
Bore ∅ mm	79.5	79.5	79.5	79.5
Stroke mm	95.5	95.5	95.5	95.5
Compression ratio	19.5	19.5	19.5	19.5
Injection/ignition	SDI	TDI	SDI	TDI
CN min.	49	49	49	49
Exhaust emissions fulfil	-	-	EU 2	EU 2
EPC system	yes	yes	yes	yes
Self-diagnosis	yes	yes	yes	yes
Catalytic converter	yes	yes	yes	yes
Lambda regulation	no	no	no	no
Exhaust gas recirculation	yes	yes	yes	yes
Turbocharged	no	yes	no	yes
Charge air cooling	no	yes	no	yes

Engines →	Diesel engine	Diesel engine	Diesel engine	Diesel engine
Displacement l	1.7	1.9	1.7	1.9
Engine code	**AHB**[3)] [1]	**AHU**	**AKW**	**ALE**
No. of cylinders/valves per cylinder	4/2	4/2	4/2	4/2
Power kW at rpm	42/4200	66/4000	44/4250	66/4000
Torque Nm at rpm	112/2200 to 2600	202/1900	112/2000 to 3000	202/1900
Bore ∅ mm	79.5	79.5	79.5	79.5
Stroke mm	86.4	95.5	86.4	95.5
Compression ratio	19.5	19.5	19.5	19.5
Injection/ignition	SDI	TDI	SDI	TDI
CN min.	49	49	49	49
Exhaust emissions fulfil	-	-	-	D3 standard
EPC system	yes	yes	yes	yes
Self-diagnosis	yes	yes	yes	yes
Catalytic converter	yes	yes	yes	yes
Lambda regulation	no	no	no	no
Exhaust gas recirculation	yes	yes	yes	yes
Turbocharged	no	yes	no	yes
Charge air cooling	no	yes	no	yes

Engines →	Diesel engine	Diesel engine	Diesel engine	Diesel engine
Displacement l	1.9	1.9	1.9	1.9
Engine code	**ALH**	**AQM**	**ASK**	**ASV**
No. of cylinders/valves per cylinder	4/2	4/2	4/2	4/2
Power kW at rpm	66/3750	50/4200	81/4150	81/4000
Torque Nm at rpm	210/1900	133/2200 to 2600	235/1900	235/1900

Protected by copyright. Copying for private or commercial purposes, in part or in whole, is not permitted unless authorised by Volkswagen AG. Volkswagen AG does not guarantee or accept any liability with respect to the correctness of information in this document. Copyright by Volkswagen AG.
satelettronica

Engines →	Diesel engine	Diesel engine	Diesel engine	Diesel engine
Displacement l	1.9	1.9	1.9	1.9
Engine code	**ALH**	**AQM**	**ASK**	**ASV**
Bore ∅ mm	79.5	79.5	79.5	79.5
Stroke mm	95.5	95.5	95.5	95.5
Compression ratio	19.5	19.5	19.5	19.5
Injection/ignition	TDI	SDI	TDI	TDI
CN min.	49	49	49	49
Exhaust emissions fulfil	D3 standard	D3 standard	D3 standard	D3 standard
EPC system	yes	yes	no	no
Self-diagnosis	yes	yes	yes	yes
Catalytic converter	yes	yes	yes	yes
Lambda regulation	no	no	no	no
Exhaust gas recirculation	yes	yes	yes	yes
Turbocharged	yes	no	yes	yes
Charge air cooling	yes	no	yes	yes

Engines →	Diesel engine	Diesel engine
Displacement l	1.9	1.9
Engine code	**AYQ**	**1Y**
No. of cylinders/valves per cylinder	4/2	4/2
Power kW at rpm	47/4200	47/4400
Torque Nm at rpm	128/2200 to 2750	124/2000 to 3000
Bore ∅ mm	79.5	79.5
Stroke mm	95.5	95.5
Compression ratio	19.5	22.5
Injection/ignition	SDI	SD
CN min.	49	49
Exhaust emissions fulfil	EU 3	-
EPC system	yes	no
Self-diagnosis	yes	yes
Catalytic converter	yes	yes
Lambda regulation	no	no
Exhaust gas recirculation	yes	yes
Turbocharged	no	no
Charge air cooling	no	no

Protected by copyright. Copying for private or commercial purposes, in part or in whole, is not permitted unless authorised by Volkswagen AG. Volkswagen AG does not guarantee or accept any liability with respect to the correctness of information in this document. Copyright by Volkswagen AG.
satelettronica

2 Service work

This chapter provides information on the following subjects:

- Service tables ⇒ page 6
- Oil change service ⇒ page 7
- Inspection service ⇒ page 9
- Additional work based on time or distance ⇒ page 14
- Delivery inspection ⇒ page 16

2.1 Service tables

VW engine oil standards ⇒ page 6

Filter change intervals ⇒ page 6

Toothed belt change intervals ⇒ page 7

Service intervals ⇒ page 7

2.1.1 VW engine oil standards

CADDY Van/Kombi 9K and POLO Classic/Estate 6V	
VW ENGINE OIL STANDARDS	
PETROL ENGINES	
4-cylinder engines	VW 500 00, VW 502 00, VW 504 00[1] or VW 501 01
DIESEL ENGINES	
4-cylinder engines	VW 505 00, VW 500 00, VW 507 00[1] or VW 501 01

[1] Combination product: VW 504 00/507 00

2.1.2 Filter change intervals

CADDY Van/Kombi 9K and POLO Classic/Estate 6V						
FILTER CHANGE INTERVALS						
ENGINE OIL FILTER						
All engine types	Every 15,000 km or 1 year					
AIR FILTER						
►1996	Every 30,000 km or 2 years					
1997 to 1999	Every 60,000 km or 2 years					
2000►	Every 60,000 km or 4 years					
FUEL FILTER						
All diesel engines	Diesel conforming to EN 590		Diesel not conforming to EN 590		Biodiesel (RME) conforming to EN 14214	
	Change	Drain water	Change	Drain water	Change	Drain water
►1996	Every 30,000 km	Every 15,000 km	Every 15,000 km	Every 7,500 km	Every 15,000 km	Every 7,500 km
1997►	Every 60,000 km	Every 30,000 km	Every 30,000 km	Every 15,000 km	Every 30,000 km	Every 15,000 km
DUST AND POLLEN FILTER						

satelettronica
Copyright by Volkswagen AG. Volkswagen AG does not guarantee or accept any liability with respect to the correctness of information in this document. Copying for private or commercial purposes, in part or in whole, is not permitted unless authorised by Volkswagen AG.

CADDY Van/Kombi 9K and POLO Classic/Estate 6V	
FILTER CHANGE INTERVALS	
All engine types	Every 30,000 km or 2 years

2.1.3 Toothed belt change intervals

CADDY Van/Kombi 9K and POLO Classic/Estate 6V		
TOOTHED BELT CHANGE INTERVALS		
DIESEL ENGINES	Change intervals	Idler roller
Engine code AKW	Every 60,000 km	
Engine codes AHB, AEY, AHU, ALE and AFN	Every 90,000 km	
Engine code AGP, AQM, ALH, AGR, ASK, ASV and AYQ ►2001	Every 90,000 km	
Engine code AGP, AQM, ALH, AGR, ASK, ASV and AYQ 2002►	Every 120,000 km	Every 120,000 km

2.1.4 Service intervals

CADDY Van/Kombi 9K and POLO Classic/Estate 6V		
SERVICE INTERVALS		
Since introduction	Diesel, in countries where the sulphur content in fuel is high	Oil change service every 7,500 km or 1 year
Since introduction	For all vehicles	Oil change service every 15,000 km
Since introduction	For all vehicles	Inspection every 12 months
Since introduction	For all vehicles	Inspection every 30,000 km

Protected by copyright. Copying for private or commercial purposes, in part or in whole, is not permitted unless authorised by Volkswagen AG. Volkswagen AG does not guarantee or accept any liability with respect to the correctness of information in this document. Copyright by Volkswagen AG.

satelettronica

2.2 Oil change service

Oil change service according to flexible service interval display ⇒ page 7

Oil change service every 15,000 km ⇒ page 8

2.2.1 Oil change service according to flexible service interval display

Note

Inform the customer if faults are found during service and repair measures are necessary.

Caution

- *If RME fuel (biodiesel) is used, always note the information on RME fuel (biodiesel) ⇒ page 25 .*
- *When using RME (biodiesel) according to "EN 14214", the fuel filter must be renewed every 15,000 km.*

Caution

- *In countries where the diesel has a high sulphur content, change oil every 7,500 km. Affected countries with a high sulphur content ⇒ page 24 .*

– Ask if customer requires:

• New wiper blades

• Replenish Windscreen Clear G 052 164 (cleanser and anti-freeze).

– Check if first aid box storage life date has been exceeded.

– Removing and installing engine compartment cover -bottom- (noise insulation tray)

The sequence of the individual service tasks has been tested and optimised. Therefore, it should be followed to avoid unnecessary interruptions in the work.

Vehicles with diesel engine code 1Y	
– Fuel filter: drain water • Only applies to vehicles 1996➤	⇒ page 112
– Engine oil: drain or extract, renew oil filter	⇒ page 72
– Front and rear brake pads/linings: check thickness	⇒ page 83
– Engine oil: replenish	⇒ page 72
– Service interval display: reset	⇒ page 34
– Enter date of next service on sticker and attach sticker to driver side door pillar (B-pillar).	⇒ page 26

2.2.2 Oil change service every 15,000 km

Note

Inform the customer if faults are found during service and repair measures are necessary.

Caution

- *If RME fuel (biodiesel) is used, always note the information on RME fuel (biodiesel) ⇒ page 25 .*
- *When using RME (biodiesel) according to "EN 14214", the fuel filter must be renewed every 15,000 km.*

Protected by copyright. Copyright by Volkswagen AG. Copyright by Volkswagen AG. Volkswagen AG does not guarantee or accept any liability with respect to the correctness of information in this document. Copying or making available to third parties is not permitted unless authorised by Volkswagen AG.
satelettronica

Protected by copyright. Copyright by Volkswagen AG. Volkswagen AG does not guarantee or accept any liability with respect to the correctness of information in this document. Copyright by Volkswagen AG. Not permitted for commercial purposes, in part or in whole, without the express authorisation of Volkswagen AG.

Caution

- *In countries where the diesel has a high sulphur content, change oil every 7,500 km. Affected countries with a high sulphur content* ⇒ page 24 .

– Ask if customer requires:

• New wiper blades

• Replenish Windscreen Clear G 052 164 (cleanser and anti-freeze).

– Check if first aid box storage life date has been exceeded.

– Removing and installing engine compartment cover -bottom- (noise insulation tray)

The sequence of the individual service tasks has been tested and optimised. Therefore, it should be followed to avoid unnecessary interruptions in the work.

Vehicles with petrol engine	
Vehicles with diesel engine (not engine code 1Y)	
– Toothed belt: check for wear • Only valid for vehicles with diesel engine ►2000	⇒ page 98
– Fuel filter: drain water • Only valid for vehicles with diesel engine ►1996	⇒ page 112
– Engine oil: drain or extract; renew oil filter	⇒ page 72
– Front and rear brake pads/linings: check thickness	⇒ page 83
– Engine oil: replenish	⇒ page 72
– Service interval display: reset	⇒ page 34
– Enter date of next service on sticker and attach sticker to driver side door pillar (B-pillar).	⇒ page 26

2.3 Inspection service

Inspection service every 12 months ⇒ page 9

Inspection service every 30,000 km ⇒ page 12

2.3.1 Inspection service every 12 months

Note

Inform the customer if faults are found during service and repair measures are necessary.

Caution

- *If RME fuel (biodiesel) is used, always note the information on RME fuel (biodiesel)* ⇒ page 25 .
- *When using RME (biodiesel) according to "EN 14214", the fuel filter must be renewed every 15,000 km.*

satelettronica

Caution

- *In countries where the diesel has a high sulphur content, change oil every 7,500 km. Affected countries with a high sulphur content ⇒ page 24 .*

– Ask if customer requires:

- New wiper blades
- Replenish Windscreen Clear G 052 164 (cleanser and anti-freeze).

– Check if first aid box storage life date has been exceeded.

– Removing and installing engine compartment cover -bottom- (noise insulation tray)

The sequence of the individual service tasks has been tested and optimised. Therefore, it should be followed to avoid unnecessary interruptions in the work.

Work to be completed for inspection service every 12 months	
Electrics	
– Front lights – side lights, dipped beam, main beam, fog lights, turn signals, hazard warning lights: check function	
– Rear lights - brake lights (including 3rd brake light), tail lights, reversing lights, rear fog light, number plate light, turn signals, hazard warning lights, luggage/load compartment lights: check function	
– Interior and glove compartment lights, cigarette lighter, warning lamps and horn: check function	
– Driver and front passenger airbag: visual check of airbag units for exterior damage	⇒ page 28
– Self-diagnosis: read fault memories of all systems	⇒ page 30
– Service interval display: reset	⇒ page 34

Work to be completed for inspection service every 12 months	
Vehicle exterior	
– Door arrester and securing pins: grease	⇒ page 53
– Window wash/wipe system and headlight washer system: check function and settings	⇒ page 56
– Wiper blades: check for damage; check park position; only if wiper blades “judder”: check setting angle	⇒ page 61

Work to be completed for inspection service every 12 months	
Tyres	
– Front left wheel: check condition and wear pattern of tyre; enter tread depth: _____ mm	⇒ page 66
– Rear left wheel: check condition and wear pattern of tyre; enter tread depth: _____ mm	⇒ page 66
– Rear right wheel: check condition and wear pattern of tyre; enter tread depth: _____ mm	⇒ page 66
– Front right wheel: check condition and wear pattern of tyre; enter tread depth: _____ mm	⇒ page 66
– Spare wheel: check condition and wear pattern of tyre; enter tread depth: _____ mm	⇒ page 66

Protected by copyright. Copying for private or commercial purposes, in any form or in whole or in part, is not permitted unless authorised by Volkswagen AG. Volkswagen AG does not guarantee or accept any liability with respect to the correctness of information in this document. Copyright by Volkswagen AG.

satelettronica

Work to be completed for inspection service every 12 months	
Tyres	
– Tyre pressure on all 4 wheels and spare wheel: check, if necessary correct	⇒ page 66

Work to be completed for inspection service every 12 months	
Underside of vehicle	
– Engine oil: drain or extract; renew oil filter	⇒ page 72
– Engine and components in engine compartment: inspect for leaks and damage	⇒ page 76
– Gearbox, final drive and drive shaft boots: inspect for leaks and damage.	⇒ page 80
– Brake system: inspect for leaks and damage.	⇒ page 83
– Front and rear brake pads/linings: check thickness	⇒ page 83
– Exhaust system: inspect for leaks, firm seating and damage.	
– Track rod ends: check clearance, firm seating and boots	⇒ page 86
– Swivel joints: visual check of swivel joint boots for leaks and damage	⇒ page 87

Work to be completed for inspection service every 12 months	
Engine compartment	
– Engine oil: replenish	⇒ page 72
– Engine and components in engine compartment: visual check for leaks and damage (from above)	⇒ page 76
– Windscreen wash/wipe system: replenish Windscreen Clear with anti-freeze G 052 164	⇒ page 56
– Cooling system: check anti-freeze concentration and level of coolant; Specification -25°C (in countries with arctic climate -35°C) actual value (measured value): ____°C	⇒ page 87
– Toothed belt: check for wear • Only valid for SDI/TDI engines ►2000	⇒ page 98
– Fuel filter: drain water • Only valid for vehicles with diesel engine ►1996	⇒ page 112
– Brake fluid level (dependent upon brake pad/lining wear): check	⇒ page 123
– Battery: visual check	⇒ page 126
– Idling speed: check • Only valid for vehicles with diesel engine and engine code 1Y, when no exhaust emissions test has been performed.	⇒ page 126

Work to be completed for inspection service every 12 months	
Final checks	
– Headlights: check adjustment	⇒ page 126
– Enter date of next service on sticker and attach sticker to driver side door pillar (B-pillar).	⇒ page 26
– Carry out road test	⇒ page 130

Protected by copyright. Copyright by Volkswagen AG. Volkswagen AG does not guarantee or accept any liability with respect to the correctness of information in this document. Copyright by Volkswagen AG. Reproduction, in part or in whole, is not permitted without written permission. Reproduced for educational purposes, in part or in whole, is not permitted without written permission.
satelettronica

2.3.2 Inspection service every 30,000 km

Note

Inform the customer if faults are found during service and repair measures are necessary.

Protected by copyright. Copyright by Volkswagen AG. Volkswagen AG does not guarantee or accept any liability with respect to the correctness of information in this document. Copying for private or commercial purposes, in part or in whole, is not permitted unless authorised by Volkswagen AG.

Caution

- *If RME fuel (biodiesel) is used, always note the information on RME fuel (biodiesel) ⇒ page 25 .*
- *When using RME (biodiesel) according to "EN 14214", the fuel filter must be renewed every 15,000 km.*

Caution

- *In countries where the diesel has a high sulphur content, change oil every 7,500 km. Affected countries with a high sulphur content ⇒ page 24 .*

– Ask if customer requires:

- New wiper blades
- Replenish Windscreen Clear G 052 164 (cleanser and anti-freeze).

– Check if first aid box storage life date has been exceeded.

– Removing and installing engine compartment cover -bottom- (noise insulation tray)

The sequence of the individual service tasks has been tested and optimised. Therefore, it should be followed to avoid unnecessary interruptions in the work.

Scope of work in conjunction with inspection every 30,000 km	
Electrics	
– Front lights – side lights, dipped beam, main beam, fog lights, turn signals, hazard warning lights: check function	
– Rear lights - brake lights (including 3rd brake light), tail lights, reversing lights, rear fog light, number plate light, turn signals, hazard warning lights, luggage/load compartment lights: check function	
– Interior and glove compartment lights, cigarette lighter, warning lamps and horn: check function	
– Driver's and passenger airbag: visual check of airbag units for external damage	⇒ page 28
– Self-diagnosis: read fault memories of all systems	⇒ page 30
– Service interval display: reset	⇒ page 34

Scope of work in conjunction with inspection every 30,000 km	
Vehicle exterior	
– Door arrester and securing pins: grease	⇒ page 53
– Sunroof: check function, clean guide rails and lubricate with special grease -G 000 450 02-	⇒ page 54
– Window wash/wipe system and headlight washer system: check function and settings	⇒ page 56

satelettronica

Scope of work in conjunction with inspection every 30,000 km	
Vehicle exterior	
– Windscreen wiper blades: check for damage; check park position; only if wiper blades “judder”: check setting angle	⇒ page 61

Scope of work in conjunction with inspection every 30,000 km	
Tyres	
– Front left wheel: check condition and wear pattern of tyre; enter tread depth: _______ mm	⇒ page 66
– Rear left wheel: check condition and wear pattern of tyre; enter tread depth: _______ mm	⇒ page 66
– Rear right wheel: check condition and wear pattern of tyre; enter tread depth: _______ mm	⇒ page 66
– Front right wheel: check condition and wear pattern of tyre; enter tread depth: _______ mm	⇒ page 66
– Spare wheel: check condition and wear pattern of tyre; enter tread depth: _______ mm	⇒ page 66
– Tyre pressure on all 4 wheels and spare wheel: check, if necessary correct	⇒ page 66

Scope of work in conjunction with inspection every 30,000 km	
Underside of vehicle	
– Engine oil: drain or extract; renew oil filter	⇒ page 72
– Engine and components in engine compartment: inspect for leaks and damage	⇒ page 76
– V-belt: check condition and tension	⇒ page 77
– Poly V-belt: check condition and tension belt • Only valid for engines without automatic tensioning roller	⇒ page 78
– Gearbox, final drive and drive shaft boots: inspect for leaks and damage.	⇒ page 80
– Manual gearbox/final drive: check oil level	⇒ page 80
– Brake system: inspect for leaks and damage.	⇒ page 83
– Front and rear brake pads/linings: check thickness	⇒ page 83
– Underbody: visual check for damage to underbody sealant and underbody panels	⇒ page 86
– Exhaust system: inspect for leaks, firm seating and damage.	
– Track rod ends: check clearance, firm seating and boots	⇒ page 86
– Swivel joints: visual check of swivel joint boots for leaks and damage	⇒ page 87

Scope of work in conjunction with inspection every 30,000 km	
Engine compartment	
– Engine oil: replenish	⇒ page 72
– Engine and components in engine compartment: visual check for leaks and damage (from above)	⇒ page 76
– Windscreen wash/wipe system: replenish Windscreen Clear with anti-freeze G 052 164	⇒ page 56

Protected by copyright. Copying for private or commercial purposes, in part or in whole, is not permitted unless authorised by Volkswagen AG. Volkswagen AG does not guarantee or accept any liability with respect to the correctness of information in this document. Copyright by Volkswagen AG.

sateletronica

Protected by copyright. Copyright for private or commercial purposes in part or whole is not permitted unless authorised by Volkswagen AG. Volkswagen AG does not guarantee or accept any liability with respect to the correctness of information in this document. Copyright by Volkswagen AG.

Scope of work in conjunction with inspection every 30,000 km	
Engine compartment	
– Cooling system: check anti-freeze concentration and level of coolant; specification -25°C (in countries with arctic climate -35°C) actual value (measured value):____°C	⇒ page 87
– Toothed belt: check for wear • Only valid for SDI/TDI engines ►2000	⇒ page 98
– Camshaft drive toothed belt and tensioning roller: check • Only valid for vehicles with automatic gearbox and engine code ALH	⇒ page 99
– Fuel filter: renew • Only valid for vehicles with diesel engine ►1996	⇒ page 111
– Fuel filter: drain water • Only valid for vehicles with diesel engine 1997►	⇒ page 112
– Power assisted steering: check fluid level	⇒ page 119
– Brake fluid level (dependent upon brake pad/lining wear): check	⇒ page 123
– Battery: visual check	⇒ page 126
– Idling speed: check • Only valid for vehicles with diesel engine and engine code 1Y, when no exhaust emissions test has been performed.	⇒ page 126

Scope of work in conjunction with inspection every 30,000 km	
Final checks	
– Headlights: check adjustment	⇒ page 126
– Enter date of next service on sticker and attach sticker to driver side door pillar (B-pillar).	⇒ page 26
– Carry out road test	⇒ page 130

2.4 Additional work based on time or distance

- Depending on conditions under which the vehicle is used and vehicle equipment, extra service measures must be performed in addition to the inspection service or oil change service.
- It is also possible, to perform additional work outside the service intervals with regard to the entries in the service schedule or service sticker: “Your next service dates”.

Every 30,000 km

– Air filter: clean housing and renew filter element • Only applies to vehicles ►1996 • Only valid for vehicles driving more than 30,000 km in 2 years	⇒ page 106
– Dust and pollen filter: renew filter element • Only valid for vehicles driving more than 30,000 km in 2 years	⇒ page 95

satelettronica

Every 60,000 km

– Toothed belt: renew • Only valid for vehicles with diesel engine and engine code AKW	⇒ page 105
– Poly V-belt: check condition • Only valid for vehicles with automatic tensioning roller	⇒ page 78
– Air filter: clean housing and renew filter element • Only valid for vehicles from 1997 up to 1999 • Only valid for vehicles driving more than 60,000 km in 2 years	⇒ page 106
– Air filter: clean housing and renew filter element • Only applies to vehicles 2000► • Only valid for vehicles driving more than 60,000 km in 4 years	⇒ page 106
– Automatic gearbox: check oil level of final drive	⇒ page 82
– Automatic gearbox: check ATF level	⇒ page 112
– Fuel filter: renew • Only applies to vehicles 1997►	⇒ page 111
– Spark plugs: renew • On vehicles ►1999 without time limit • Valid for vehicles 2000► driving more than 60,000 km in 4 years	⇒ page 89

Every 90,000 km

– Toothed belt: renew • Only valid for vehicles with diesel engine and engine codes: AEY, AFN, AHB, AHU and ALE	⇒ page 105
– Camshaft drive toothed belt: renew • Only valid for vehicles with diesel engine and engine codes: AGP, AGR, ALH, AQM, ASK, ASV and AYQ	⇒ page 105
– Toothed belt: check condition and tension • Only valid for diesel engine with engine code 1Y	⇒ page 102

Every 90,000 km, then every 30,000 km

– Camshaft drive toothed belt: check. • Only valid for vehicles with petrol engine without prescribed change interval	⇒ page 97

Every 2 years

– Brake fluid: change	⇒ page 120

Protected by copyright. Copyright by Volkswagen AG. Volkswagen AG does not guarantee or accept any liability with respect to the correctness of information in this document. Copying for private or commercial purposes, in part or in whole, is not permitted unless authorised by Volkswagen AG.
satelettronica

– Air filter: cleaning housing and renewing filter element • Only applies to vehicles ►1996 • Only valid for vehicles driving less than 30,000 km in 2 years	⇒ page 106
– Air filter: cleaning housing and renewing filter element • Only valid for vehicles from 1997 up to 1999 • Only valid for vehicles driving less than 60,000 km in 2 years	⇒ page 106
– Dust and pollen filter: renew filter element • Only valid for vehicles driving less than 30,000 km in 2 years	⇒ page 95

3 years after initial registration and then every 2 years

– Exhaust emissions test (EET): perform.	⇒ page 131

Every 4 years

– Spark plugs: renew • Only applies to vehicles 2000► • Only valid for vehicles driving less than 60,000 km in 4 years	⇒ page 89
– Air filter: clean housing and renew filter element • Only applies to vehicles 2000► • Only valid for vehicles driving less than 60,000 km in 4 years	⇒ page 106

2.5 Delivery inspection

- The sequence of the individual service tasks has been tested and optimised. Therefore, it should be followed to avoid unnecessary interruptions in the work.
- For stock vehicles and vehicles in storage perform measures according to ⇒ Service for stock vehicles and vehicles in storage from ELSA ⇒ maintenance tables .

Work to be completed for delivery inspection	
Vehicle interior	
– Door handles, door locks, central locking and windows: check function and ease of movement	
– Check function and number of keys, if necessary remove grease	
– Fuse(s) (in ashtray): fit	
– All switches, electrical consumers, gauges and other controls: check function	
– Service interval display: reset	⇒ page 34
– Electric windows: initialise	⇒ page 54
– Clock: set to correct time	⇒ page 54
– Radio: activate anti-theft coding, store local radio stations to station buttons	⇒ page 55
– Radio card (part of radio operating instructions): stick radio serial number and fixed code number sticker onto radio card.	

Copyright by Volkswagen AG. Copyright by Volkswagen AG. Volkswagen AG does not guarantee or accept any liability with respect to the correctness of information in this document. Copying or distribution is not permitted unless authorised by Volkswagen AG.

satelettronica

Work to be completed for delivery inspection	
Vehicle interior	
– Check vehicle interior for cleanliness: front and rear seats, interior trim, carpets/mats, windows	
– Seat and carpet protective coverings: remove.	

Work to be completed for delivery inspection	
Vehicle exterior	
– All equipment which has been packed inside vehicle (mats, wiper arms, spoilers, roof aerial, wheel trims/hub caps, tyre valve extensions): install	
– Edge protection on doors (plastic film): remove.	
– Check vehicle exterior for cleanliness: paintwork, decorative parts, windows, wiper blades	
– Wheel securing bolts: tightening to specified torque	⇒ page 64

Work to be completed for delivery inspection	
Tyres	
– Rear left wheel: check condition and inflation pressure of tyre	⇒ page 66
– Front left wheel: check condition and inflation pressure of tyre	⇒ page 66
– Rear right wheel: check condition and inflation pressure of tyre	⇒ page 66
– Front right wheel: check condition and inflation pressure of tyre	⇒ page 66
– Spare wheel: check condition and inflation pressure of tyre	⇒ page 66

Work to be completed for delivery inspection	
Underside of vehicle	
– Vehicle from below (without removing engine noise insulation): engine, joint protective bellows, brake system, steering, axles, gearbox/final drive, hoses, fluid reservoir	⇒ page 76
– Carrying out visual check for leaks and damage: engine, joint protective bellows, brake system, steering, axles, gearbox/final drive, hoses, fluid reservoir	⇒ page 83
– Vehicle underside (floor pan): visual check for damage	⇒ page 86

Work to be completed for delivery inspection	
Engine compartment	
– Battery: check battery terminals by hand for tightness	⇒ page 124
– Battery: check	⇒ page 126
– Window wash/wipe system and headlight washer system: check function and settings; replenish Windscreen Clear with anti-freeze G 052 164 to maximum.	⇒ page 56
– Engine oil level: check	⇒ page 71
– Engine and components in engine compartment: visual check for leaks and damage (from above)	⇒ page 76
– Coolant level: check it is at maximum	⇒ page 87
– Power assisted steering: check fluid level.	⇒ page 119
– Brake fluid level: check level is at maximum	⇒ page 123

Protected by copyright. Copying for private or commercial purposes, in part or in whole is not permitted unless authorised by Volkswagen AG. Volkswagen AG does not guarantee or accept any liability with respect to the correctness of information in this document. Copyright by Volkswagen AG.

satelettronica

Work to be completed for delivery inspection	
Final checks	
– Service sticker “Your next service”: Enter date for next service (including brake fluid change) on sticker and apply sticker to driver side door pillar (B-pillar)	
– Service schedule: enter delivery inspection.	
– Vehicle literature: check literature is complete and prepare for handover to customer	
– Carry out road test	⇒ page 130

Protected by copyright. Copying for private or commercial purposes, in part or in whole, is not permitted unless authorised by Volkswagen AG. Volkswagen AG does not guarantee or accept any liability with respect to the correctness of information in this document. Copyright by Volkswagen AG.

satelettronica

3 General information

- Raising vehicle with lifting platform and trolley jack ⇒ page 19
- Connecting vehicle diagnostic tester ⇒ page 20
- Vehicle data sticker ⇒ page 23
- Engine code and engine number ⇒ page 23
- Vehicle identification number ⇒ page 24
- Type plate ⇒ page 24
- Countries where diesel has a high sulphur content ⇒ page 24
- RME fuel (biodiesel) ⇒ page 25
- Attaching “Your next service” sticker ⇒ page 26

3.1 Raising vehicle with lifting platform and trolley jack

Safety information ⇒ page 19

Lifting points for lifting platform and trolley jack ⇒ page 20

3.1.1 Safety information

WARNING

- *Before driving onto a lifting platform, ensure that there is sufficient clearance between low-lying vehicle components and lifting platform.*
- *Before driving a vehicle onto a lifting platform it must be ensured that the vehicle weight does not exceed the permissible lifting capacity of the platform.*
- *Vehicle may be lifted only at points indicated in figure to avoid damaging vehicle floor pan or tipping vehicle.*
- *Never start engine and engage a gear with vehicle lifted as long as even one driven wheel has contact with the floor! Disregarding these warnings risks the danger of an accident!*
- *If work is to be performed under vehicle, it must be supported by suitable jack stands.*

Protected by copyright. Copying for private or commercial purposes, in part or in whole, is not permitted unless authorised by Volkswagen AG. Volkswagen AG does not guarantee or accept any liability with respect to the correctness of information in this document. Copyright by Volkswagen AG.
satelettronica

3.1.2 Lifting points for lifting platform and trolley jack

Front (all vehicles)

Position support plate at cross reinforcement -1- of floor pan.

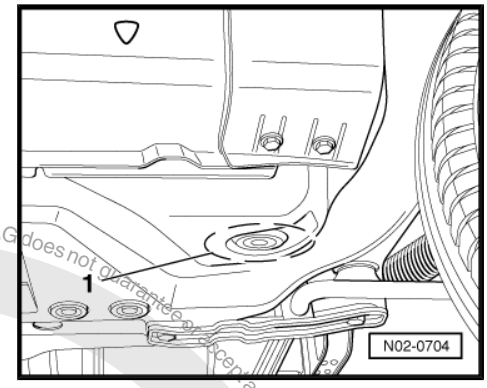

> **WARNING**
>
> ***The vehicle must not be lifted on vertical reinforcement of side member, otherwise serious damage may occur to the vehicle.***

Rear (Caddy)

Position support plate on vertical reinforcement of side member at area marked -1-. The centre of the support plate must align with marking for the jack -arrow-.

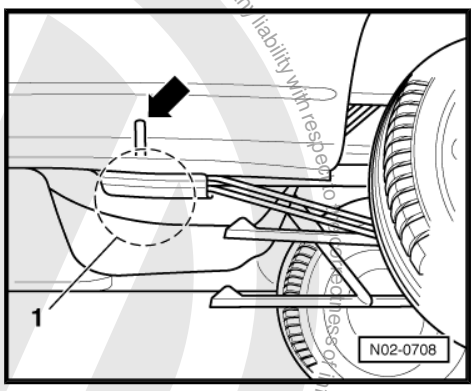

Note

Ensure that side member reinforcement seats centrally on support plate of hoist mounting and the side member is not damaged.

Rear (Polo Classic, Polo Estate)

Position support plate at mounting bracket at marked area -1-.

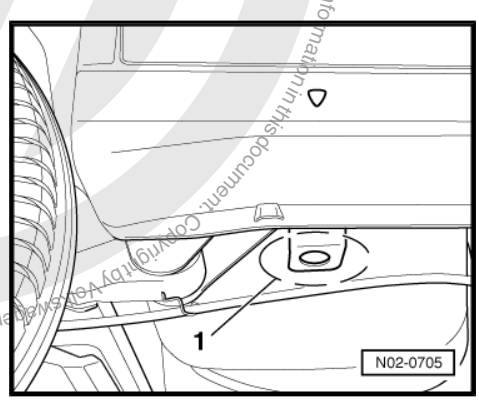

3.2 Connecting vehicle diagnostic tester

Special tools and workshop equipment required

- -Fehlerauslesegerät V.A.G. 1551-

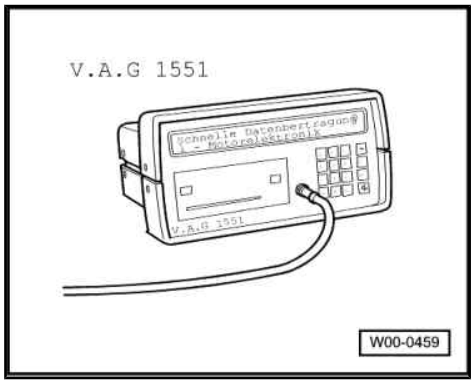

Protected by copyright. Copying for private or commercial purposes, in part or in whole, is not permitted unless authorised by Volkswagen AG. Volkswagen AG does not guarantee or accept any liability with respect to the correctness of information in this document. Copyright by Volkswagen AG.

satelettronica

Protected by copyright. Copying for private or commercial purposes, in part or in whole, is not permitted unless authorised by Volkswagen AG. Volkswagen AG does not guarantee or accept any liability with respect to the correctness of information in this document. Copyright by Volkswagen AG.

- Diagnostic cable - V.A.G 1551/3A-

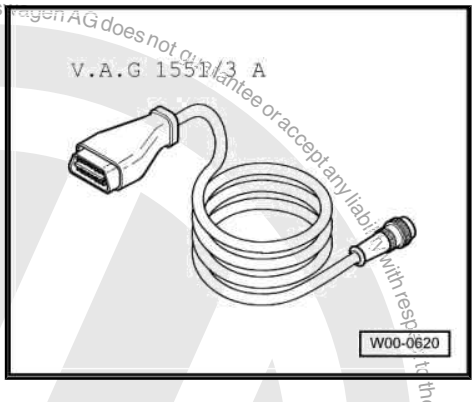

- Vehicle diagnosis, testing and information system - VAS 5051B-

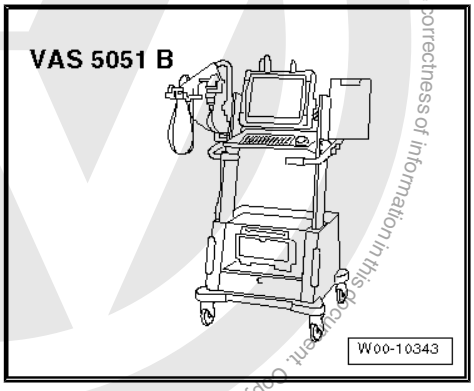

- Diagnostic cable - VAS 5051/6A-

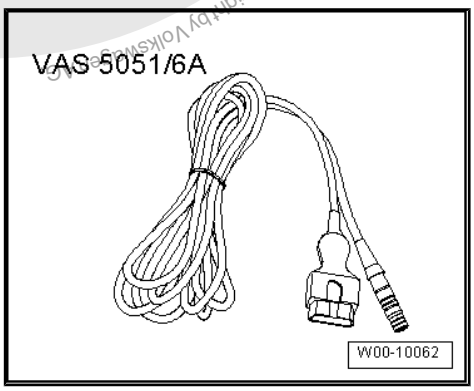

- Vehicle diagnostic and service information system - VAS 5052-

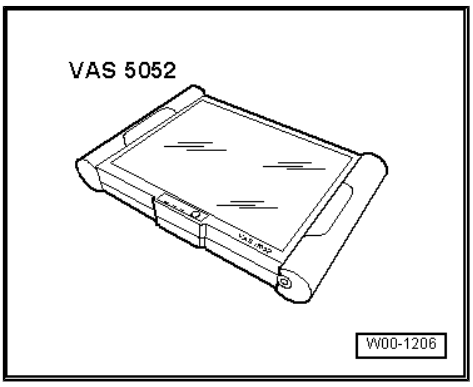

satelettronica

- Diagnostic cable, 2 m - VAS 5052/3-

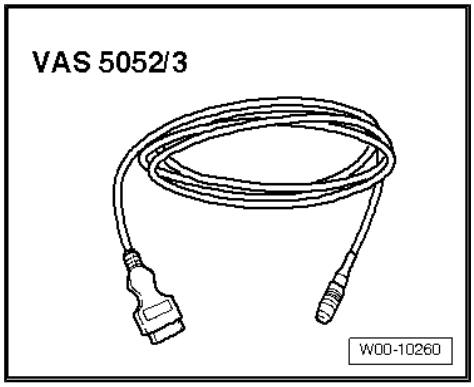

- Or subsequent units

Note

Ensure that the fault reader is only used with the respective diagnostic cable.

WARNING

- ***Always secure testing and measuring equipment on the rear seat during a road test.***
- ***Only a passenger may operate these devices while the vehicle is in motion.***

– Carry out following procedure:

Connecting selected fault reader

– Apply handbrake.
– Automatic gearbox: Move selector lever to position “P” or “N”.
– Manual gearbox: gear lever in neutral.

With ignition switched off connect fault reader as follows:

Vehicles ►09.99

– Open stowage compartment on driver side and unhook.
– Connect diagnosis cable connector to diagnostic connection.
– Switch on tester.
– Switch on ignition.

Now follow screen display to start desired functions.

Vehicles 10.99►

– Pull ashtray insert out of centre console.
– Connect diagnosis cable connector to diagnostic connection.
– Switch on tester.
– Switch on ignition.

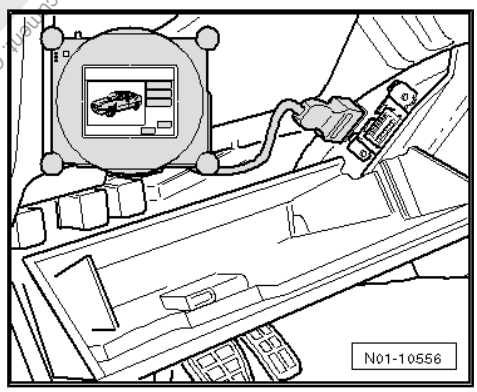

Copyright by Volkswagen AG. Volkswagen AG does not guarantee or accept any liability with respect to the correctness of information in this document. Copyright by Volkswagen AG. Transmitted by copyright protected internet platforms is not permitted without the express authorisation by Volkswagen AG.
satelettronica

Now follow screen display to start desired functions.

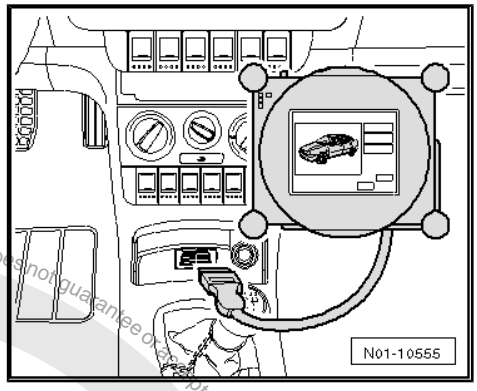

3.3 Vehicle data sticker

Caddy

On the delivery van the data sticker is attached on the left roof side member near the wing door and on the Kombi behind the left side trim in luggage compartment. The vehicle data sticker is also found in the service schedule for the customer.

Polo Classic and Polo Variant

The vehicle data sticker -1- is located in rear of vehicle on the left in spare wheel recess. The vehicle data sticker is also found in the service schedule for the customer.

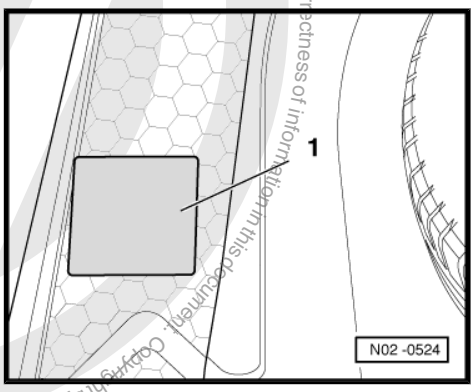

The sticker contains the following data of the vehicle

1 - Production control number

2 - Vehicle identification number

3 - Model identification number

4 - Model explanation/engine output

5 - Engine and gearbox code letters

6 - Paint number/interior equipment identification number

7 - Optional equipment identification number

3.4 Engine code and engine number

Engine code and engine number can be found quickest by checking the sticker -arrow- on toothed belt guard.

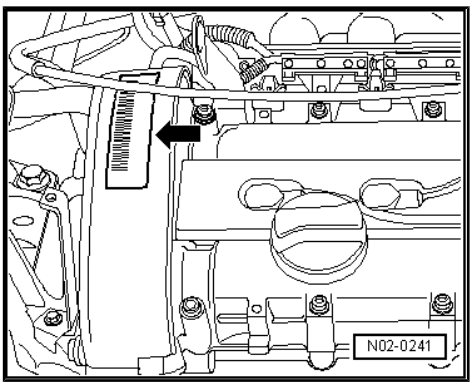

Note

The “engine code” can be found also on the vehicle data sticker. The data sticker can be found in the customer service schedule and on the Caddy delivery van on left roof side member near the wing door and on the Kombi behind the left side trim in luggage compartment. On the Polo Classic and Polo Variant the data sticker is attached on the floor pan left next to the spare wheel recess in luggage compartment.

Protected by copyright. Copying or private commercial use is not permitted unless authorised by Volkswagen AG. Volkswagen AG does not guarantee or accept any liability with respect to the correctness of information in this document. Copyright by Volkswagen AG.
satelettronica

3.5 Vehicle identification number

The vehicle identification number is located in plenum chamber It is visible through a window -arrow- in the plenum chamber cover.

Significance of vehicle identification number:

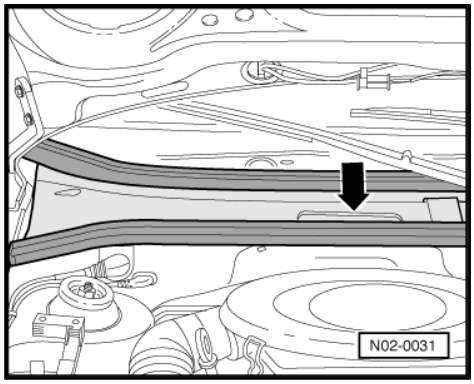

WVW	ZZZ	6K	Z	Y/1	R	000001
Manufacturer code	Filler characters	Model	Filler characters	Model year 2000/2001	Production location	Serial number

3.6 Type plate

The type plate -arrow- is secured to the plenum chamber in the engine compartment near the right suspension turret.

Vehicles for certain export countries have no type plate.

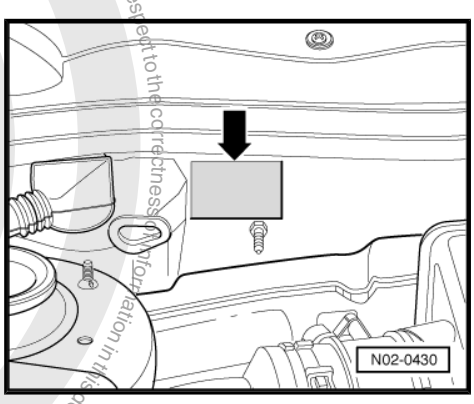

3.7 Countries where diesel has a high sulphur content

Caution

For vehicles with diesel engines an oil change service must always be performed »every 7,500 km« in the following countries:

Egypt	Jordan	Macedonia	South Africa
Armenia	Yugoslavia[4)]	Moldova	Surinam
Bahrain	Cambodia	Mozambique	Tajikistan
Bangladesh	Kazakhstan	Myanmar	Tanzania
Chile	Kenya	New Caledonia	Turkey
Dominican Republic	Columbia	Nigeria	Ukraine
El Salvador	Cuba	Oman	Uruguay
Ecuador	Kuwait	Pakistan	Uzbekistan
Ghana	Lebanon	Panama	Venezuela
Guatemala	Madagascar	Papua New Guinea	United Arab Emirates
Honduras	Malawi	Peru	Vietnam

Protected by copyright. Copyright by Volkswagen AG.
Unauthorised use, in part or in whole, is not permitted for private or commercial purposes, in part or in whole, is not permitted unauthorised by Volkswagen AG. Volkswagen AG does not guarantee or accept any liability with respect to the correctness of information in this document. Copyright by Volkswagen AG.
satelettronica

Indonesia	Malaysia	Russia (East & West)	
Iraq	Mali	Saudi Arabia	
Iran	Morocco	Zimbabwe	
Jamaica	Mauritius	Sri Lanka	

4) Yugoslavia = Serbia, Montenegro, Vojvodina, Kosovo

3.8 RME fuel (biodiesel)

RME fuel may be used only for vehicles which have been approved for this purpose by Volkswagen in the standard version.

Caution

- *When RME fuel is used and your vehicle is not suitable for this, the fuel system can be damaged.*
- *When filling the tank with biodiesel, only use RME fuel conforming to EN 14214 (FAME)!*
- *When biodiesel is used which does not conform to the required standard, the fuel filter can become blocked.*

RME fuel must conform to EN 14214 (FAME).

- RME means “Rapeseed Methyl Ester”.
- EN means “Euro standard”.
- FAME means “Fatty Acid Methyl Ester”.

Characteristics of RME fuel

- Performance can slightly be lower when using biodiesel.
- Fuel consumption can slightly be higher when using biodiesel.
- RME can be used in winter at temperatures to approx. -10°C
- At ambient temperatures below -10°C we recommend using winter diesel fuel.

Note

- *When using biodiesel observe the changed intervals for changing the fuel filter* *⇒ page 6*.
- *If it is planned not to use the vehicle for approx. two weeks, it is recommended to fill the tank with original diesel beforehand and drive approx. 50 km, to prevent damage to the fuel injection system.*

Copyright by Volkswagen AG. Volkswagen AG does not guarantee or accept any liability with respect to the correctness of information in this document. Copyright by Volkswagen AG. Protected by copyright. Copying for private or commercial purposes, in part or in whole, is not permitted unless authorised by Volkswagen AG.
satelettronica

3.9 Attaching “Your next service” sticker:

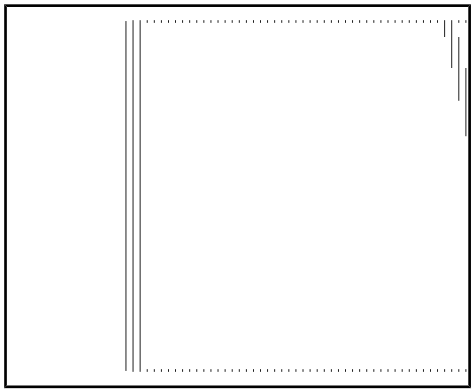

– Service sticker “Your next service”: Enter a cross in position for next oil change service or inspection service (next service due) and enter date and mileage.

– Attach sticker to driver door pillar (B-pillar).

Protected by copyright. Copying for private or commercial purposes, in part or in whole, is not permitted unless authorised by Volkswagen AG. Volkswagen AG does not guarantee or accept any liability with respect to the correctness of information in this document. Copyright by Volkswagen AG.

satelettronica

4 Descriptions of work:

In this chapter you will obtain information on the following subjects:

- Driver and front passenger airbags: visual check of airbag units ⇒ page 28
- Automatic gearbox: checking final drive oil level ⇒ page 82
- Swivel joints: inspecting ⇒ page 87
- Automatic gearbox: checking ATF level ⇒ page 112
- Tyres: checking condition, wear pattern, inflation pressure, tread depth ⇒ page 66
- Brake system: inspecting for leaks and damage ⇒ page 83
- Front and rear brake pads/linings: checking thickness ⇒ page 83
- Brake fluid: changing ⇒ page 120
- Brake fluid level (dependent upon brake pad/lining wear): checking ⇒ page 123
- Battery: checking battery terminal clamps for secure seating ⇒ page 124
- Battery: checking ⇒ page 126
- Self-diagnosis: reading fault memory of all systems ⇒ page 30
- Electric windows: initialising ⇒ page 54
- Boots: inspecting ⇒ page 80
- V-belt: checking condition and tension ⇒ page 77
- Poly V-belt: checking condition and tension belt ⇒ page 78
- Cooling system: checking coolant level and frost protection ⇒ page 87
- Fuel filter: renewing (diesel engine) ⇒ page 111
- Fuel filter: draining water (diesel engine) ⇒ page 112
- Air filter: cleaning housing and renewing filter element ⇒ page 106
- Idling speed: checking ⇒ page 126
- Engine oil level: checking ⇒ page 71
- Engine oil: draining or extracting and replenishing; renewing oil filter ⇒ page 72
- Engine and components in engine compartment: inspecting for leaks and damage (from above and below) ⇒ page 76
- Engine compartment cover (noise insulation): removing and installing ⇒ page 28
- Road test: carrying out ⇒ page 130
- Radio: activating anti-theft coding ⇒ page 55
- Wheel securing bolts: tightening to specified torque ⇒ page 64
- Service interval display: resetting ⇒ page 34
- Sunroof: checking function, cleaning and greasing guide rails ⇒ page 54

Protected by copyright. Copyright by Volkswagen AG. Volkswagen AG does not guarantee or accept any liability with respect to the correctness of information in this document. Copying for private or commercial purposes, in part or in whole, not permitted unless authorised by Volkswagen AG.
satelettronica

- Window wash/wipe system and headlight washer system: checking function and settings ⇒ page 56
- Windscreen wiper blades: checking park position if wiper blades judder: checking setting angle ⇒ page 61
- Manual gearbox/final drive: checking oil level ⇒ page 80
- Track rod ball joints: checking clearance, attachment and boots ⇒ page 86
- Dust and pollen filter: renewing filter element ⇒ page 95
- Power assisted steering: checking fluid level ⇒ page 119
- Headlight adjustment: checking ⇒ page 126
- Door arrester and securing pins: lubricating ⇒ page 53
- Clock: setting to correct time ⇒ page 54
- Underbody protection: visual check for damage ⇒ page 86
- Spark plugs: renewing ⇒ page 89
- Camshaft drive belt: checking (petrol engine) ⇒ page 97
- Toothed belt: checking for wear (SDI/TDI engines ►2000) ⇒ page 98
- Camshaft drive toothed belt: checking condition and tension (diesel engine code ALH with automatic gearbox) ⇒ page 99
- Toothed belt: checking condition and tensioning (diesel engine code 1Y) ⇒ page 102
- Toothed belt: renewing (diesel engine codes AGP, AGR, ALH, AQM, ASK, ASV and AYQ) ⇒ page 105
- Toothed belt: renewing (diesel engine codes AEY, AFN, AHB, AHU, AKW, ALE) ⇒ page 105

4.1 Removing and installing engine compartment cover (noise insulation)

Carry out following procedure:

– Remove hexagon combi bolts and hexagon nuts -arrows-, swing engine compartment cover down and unhook.

– Remove engine compartment cover downwards.

Install in reverse order of removal.

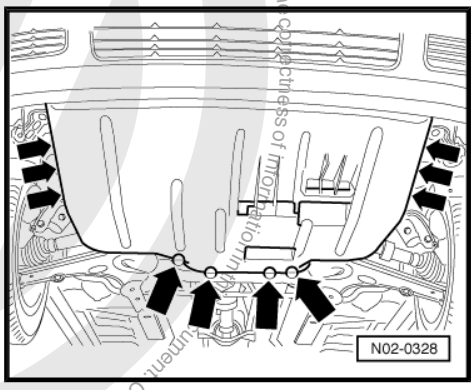

4.2 Driver and front passenger airbags: visual check of airbag units

4.2.1 Driver side airbag vehicles ►09.99

Airbag recognition, is via the inscription “AIRBAG” on the steering wheel padded plate.

Protected copyright. Copying for private or commercial purposes, in whole or in part, is not permitted unless authorised by Volkswagen AG. Volkswagen AG does not guarantee or accept any liability with respect to the correctness of information. Copyright by Volkswagen AG.
satelettronica

– Carry out visual check of padded plate -1- for exterior damage.

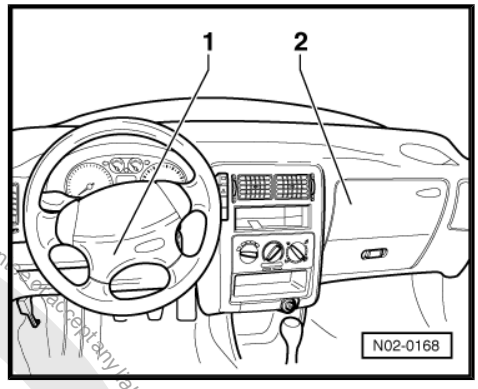

WARNING

- *The steering wheel padded plate surface must not have stickers attached or be covered or otherwise be modified. This ensures that the future function of the airbag is guaranteed. Ensure the customer is aware of these instructions.*
- *The steering wheel padded plate must only be cleaned with a dry cloth or a cloth moistened with water.*

4.2.2 Front passenger side airbag vehicles ►09.99

Airbag recognition by the inscription “AIRBAG” on the right-hand side of dash panel (front passenger side).

– Carry out visual check of the airbag module surface -2- for exterior damage.

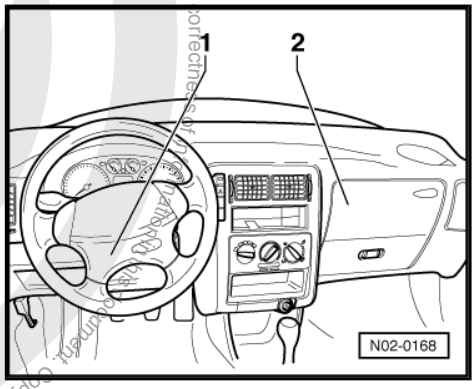

WARNING

- *The surface of the front passenger airbag module must not have stickers attached or be covered or be otherwise modified. This ensures that the future function of the airbag is guaranteed. Ensure the customer is aware of these instructions.*
- *The surface of the airbag module must only be cleaned with a dry cloth or a cloth moistened with water.*

4.2.3 Driver side airbag vehicles 10.99►

Airbag recognition, is via the inscription “AIRBAG” on the steering wheel padded plate.

– Carry out visual check of padded plate -1- for exterior damage.

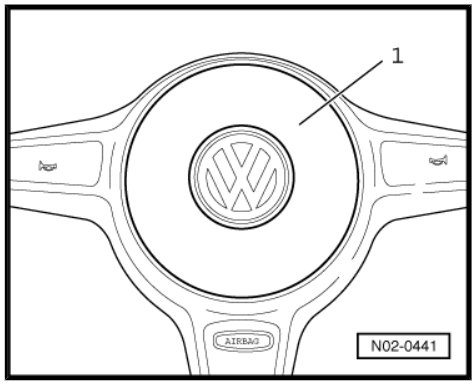

WARNING

- *The steering wheel padded plate surface must not have stickers attached or be covered or otherwise be modified. This ensures that the future function of the airbag is guaranteed. Ensure the customer is aware of these instructions.*
- *The steering wheel padded plate must only be cleaned with a dry cloth or a cloth moistened with water.*

4.2.4 Front passenger side airbag vehicles 10.99►

Airbag recognition by the inscription “AIRBAG” on the right-hand side of dash panel (front passenger side).

satelettronica

– Carry out visual check of dash panel surface -2- for exterior damage.

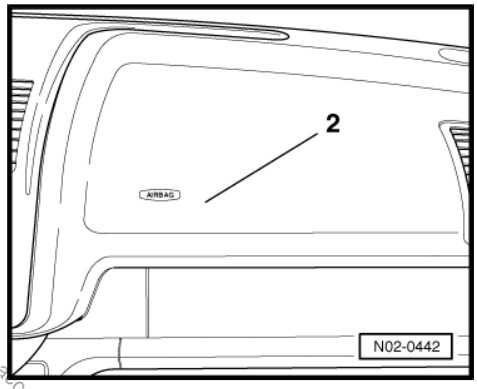

> **WARNING**
>
> - *The surface of the front passenger airbag module must not have stickers attached or be covered or be otherwise modified. This ensures that the future function of the airbag is guaranteed. Ensure the customer is aware of these instructions.*
> - *The surface of the airbag module must only be cleaned with a dry cloth or a cloth moistened with water.*

4.3 Self-diagnosis: reading fault memories of all systems

Reading fault memory can be performed using two methods:

- With fault reader - V.A.G 1551- ⇒ page 30
- Vehicle diagnosis, testing and information system - VAS 5051B- or subsequent units ⇒ page 31

> **WARNING**
>
> - *If the vehicle diagnostic tester is placed in the deployment area of an airbag during a road test, there is the risk of heavy or fatal injuries when the airbag is triggered!*
> - *During the road test take another person with you who can operate the vehicle diagnostic tester from the rear seat.*
> - *Always secure testing and measuring equipment on the rear seat during a road test.*

4.3.1 Reading fault memory of all systems using fault reader - V.A.G 1551-

– Connect fault reader ⇒ page 20 .

Reading fault memory

– Start engine and run it at idling speed.

– Switch on printer with [Print] button (warning lamp in button lights up).

Indicated on display:

```
V.A.G - SELF DIAGNOSIS HELP
1 - Rapid data transfer
```

or

```
V.A.G - SELF DIAGNOSIS HELP
2 - Flash code output
```

Appears alternately

– Press button [1] to select “Rapid data transfer” mode.

Indicated on display:

```
Rapid data transfer HELP
Select function XX
```

– Press button [0] and [0] to select address word “Automatic test sequence”.

Indicated on display:

```
Rapid data transfer Q
00 - Automatic test sequence
```

satelettronica

– Confirm entry with Q button. -V.A.G 1551- transmits all known address words one after the other.

When a control unit responds with its identification, the number of stored faults or “No fault detected” appears on the display.

Any system faults that are stored will be displayed one after the other and printed out. The -V.A.G 1551- will then transmit the next address word.

The automatic test sequence is completed when following is indicated on display:

```
V.A.G - SELF DIAGNOSIS HELP
1 - Rapid data transfer
```

or

```
V.A.G - SELF DIAGNOSIS HELP
2 - Flash code output
```

Appears alternately

– Switch off ignition.

If faults are stored, repairs are necessary. The fault log must accompany vehicle to repair.

Note

The fault reader must remain connected if service interval display is to be reset and if emissions test is to be carried out.

4.3.2 Reading fault memories of all systems using vehicle diagnosis, testing and information system - VAS 5051B- or subsequent units

Note

Observe actual operating instructions for Vehicle diagnosis, testing and information system - VAS 5051B- or subsequent units which are shown on display after selecting the functions `Administration` *and* `Operating manual`.

WARNING

- *If the vehicle diagnosis, testing and information system - VAS 5051B- or subsequent units are placed in the deployment area of an airbag during a road test, there is the risk of heavy or fatal injuries when the airbag is triggered!*
- *During the road test take another person with you who can operate the vehicle diagnosis, testing and information system - VAS 5051B- or subsequent units from the rear seat.*
- *Always secure testing and measuring equipment on the rear seat during a road test.*

– Apply handbrake.

– Automatic gearbox: Move selector lever to position “P” or “N”.

– Manual gearbox: gear lever in neutral.

Connect vehicle diagnosis, testing and information system - VAS 5051B- or subsequent units with ignition switched off ⇒ page 20 .

– Switch on ignition.

Protected by copyright. Copying for private or commercial purposes, in part or in whole, is not permitted unless authorised by Volkswagen AG. Volkswagen AG does not guarantee or accept any liability with respect to the correctness of information in this document. Copyright by Volkswagen AG.

satelettronica

Indicated on display:

Selecting operating mode

– Select operating mode `Vehicle self-diagnosis` on display -arrow-.

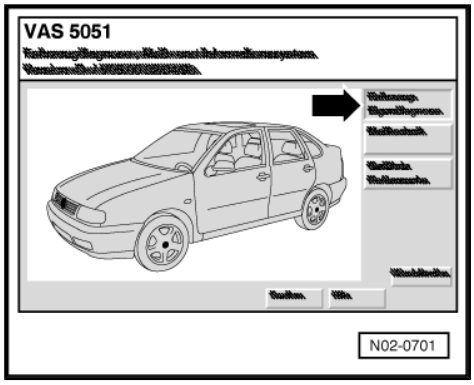

Indicated on display:

Selecting vehicle system

– Press `00 - Reading fault memory of all systems` on display -arrow-.

– The fault reader sends all known address words one after the other.

When a control unit responds with its identification, the number of stored faults or “No fault detected” appears on the display.

Any system faults that are stored will be displayed one after the other. The fault reader will then transmit the next address word.

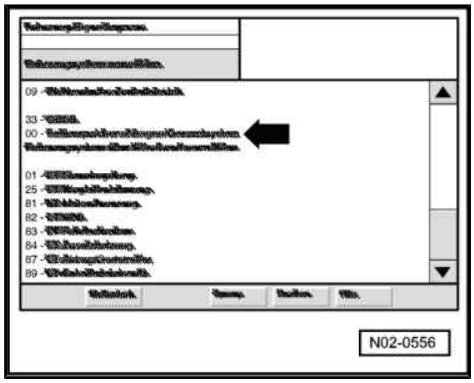

satelettronica

Protected by copyright. Copying for private or commercial purposes, in part or in whole, is not permitted unless authorised by Volkswagen AG. Volkswagen AG does not guarantee or accept any liability with respect to the correctness of information in this document. Copyright by Volkswagen AG.

The automatic test sequence is completed when following is indicated on display:

– Press Print button -1- on display and then press Screen in the print menu.

The fault reader prints out all the faults or “0 faults detected”. If faults are stored, repairs are necessary. The fault log must accompany vehicle to repair.

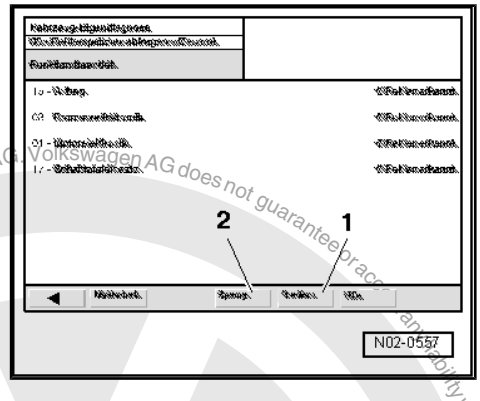

Caution

The vehicle must always be delivered to the customer with fault memory cleared.

Static faults

If one or more static faults are stored in the fault memory, it is recommended in agreement with the customer to rectify these faults (repair measure).

Sporadic faults

If only sporadic faults or notes are stored in the fault memory and the customer has no complaints in conjunction with the electronic vehicle system, clear fault memory.

Clearing fault memory

– Start operating mode Vehicle self-diagnosis in the system start mask of fault reader

There are two ways to clear the fault memory:

♦ Clear fault memory by selecting individual control units:

– Select the respective control unit in overview and select function Read fault memory and then Clear fault memory.

♦ Clearing fault memory via function Collection services:

– Touch the function Collection services on the screen and follow instructions on display of fault reader to clear the fault memory.

Note

♦ *If all faults have been cleared, it is confirmed on display.*

♦ *The diagnosis log can be sent automatically »online«.*

– Press the GoTo button on display -2-.

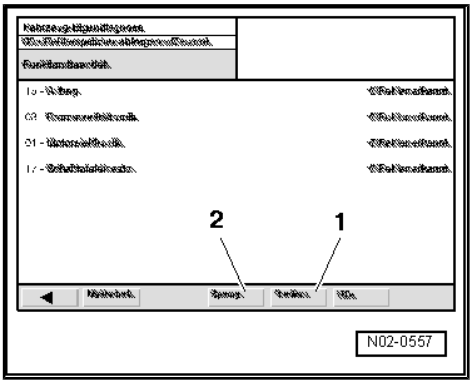

Protected by copyright. Copying for private or commercial purposes, in part or in whole, is not permitted unless authorised by Volkswagen AG. Volkswagen AG does not guarantee or accept any liability with respect to the correctness of information in this document. Copyright by Volkswagen AG.
satelettronica

Indicated on display:

– Press the End button on display -arrow-.

– Press End button in End menu.

– Switch off ignition and separate diagnosis connections.

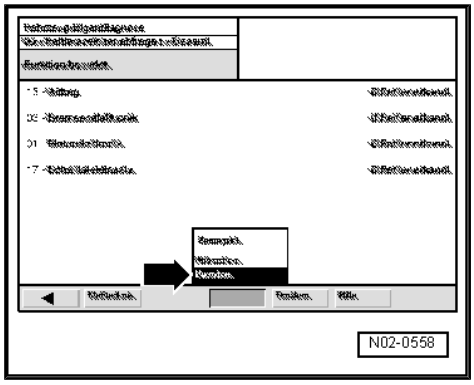

Note

The vehicle diagnosis, testing and information system - VAS 5051B- or subsequent units must remain connected if service interval display is to be reset.

4.4 Service interval display: resetting

Vehicles with diesel engine code 1Y are equipped with a flexible service interval display. The other vehicles are equipped with a non-flexible display.

Flexible display

Function:

With the flexible service interval display, in addition to the odometer and clock, the thermal load and soot load of engine oil are monitored electronically and used for calculating the service intervals.

Depending on vehicle operating conditions (driving style and engine load) the next oil change service may be due at distances between 7,500 km and 15,000 km or periods between 8 and 12 months.

On the flexible service interval display other display contents will be indicated compared with the non-flexible service interval display.

After the ignition is switched on, the display appears for a few seconds in place of the odometer display in the distance display.

If service is not required, INSP-0 will be indicated.

Non-flexible display

Function:

The service interval display electronics is comprised of, amongst other items:

♦ a time recorder

and

♦ two distance recorders.

The electronics evaluates both recorders so that the customer

♦ after a predetermined time period is exceeded or

or

♦ after a predetermined distance is reached

After the ignition is switched on, the service interval display appears for a few seconds in place of the odometer display in the distance display.

If service is not required, IN-00 will be indicated.

Protected by copyright. Copying for private or commercial purposes, in part or in whole, is not permitted unless authorised by Volkswagen AG. Volkswagen AG does not guarantee or accept any liability with respect to the correctness of information in this document. Copyright by Volkswagen AG.
satelettronica

4.4.1 Vehicles ►09.99: resetting non-flexible display

Vehicles 10.99► ⇒ page 36

Resetting flexible display for vehicles ►09.99 with engine code 1Y ⇒ page 35

After switching on the ignition (engine does not operate) the display -arrow C- appears for a few seconds in place of the odometer display in the speedometer. If service is not required, IN 00 will be indicated.

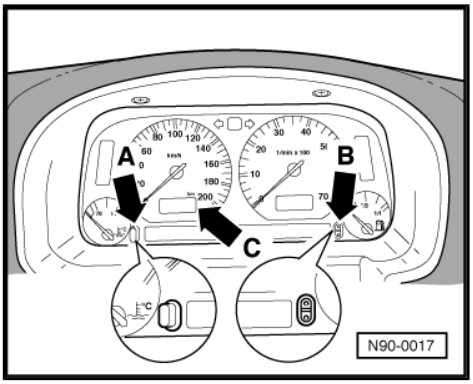

If a service is due, also after starting the engine the following display flashes for approx. 3 seconds (service):

OIL	Engine oil change or
IN 01	Inspection service every 12 months or
IN 02	Inspection service every 30,000 km

After a service has been performed, service types which appear in the display before that one, must also be called-up individually and reset:

- If the inspection service IN 02 has been performed, OIL, IN 01 and IN 02 must be reset.
- If the inspection service IN 01 has been performed, OIL and IN 01 must be reset.

Reset the display as follows:

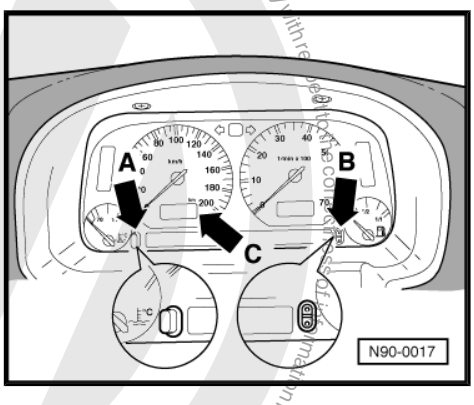

– With ignition switched on press button -arrow A- below the speedometer and hold.
– Switch off ignition and release button. The inscription “OIL” is indicated in the display.
– Press the lower of both buttons -arrow B- of digital clock until five dashes are indicated (- - - - -). Only then the service is reset.
– By pressing the button again -arrow A-, below the speedometer, the other services are indicated and can be reset individually.
– Switch on ignition and if “IN 00” appears, switch off.

4.4.2 Vehicles ►09.99 with engine code 1Y: resetting flexible display

If a service is due, also after starting the engine the following display flashes for approx. 3 seconds (service):

Indicated on display:	Type of Service:
alternately OIL or INSP	Engine oil change
or:	
INSP-1	Inspection service every 12 months
or:	
INSP-2	Inspection service every 30,000 km

Protected by copyright. Copying for private or commercial purposes, in part or in whole, is not permitted unless authorised by Volkswagen AG. Volkswagen AG does not guarantee or accept any liability with respect to the correctness of information in this document. Copyright by Volkswagen AG.
satelettronica

After a service has been performed, also the previous type of service must be called-up individually and reset.

- If the inspection service INSP-2 has been performed OIL, INSP 1 and INSP 2 must be reset.
- If the inspection service INSP-1 has been performed OIL and INSP 1 must be reset.

Reset the display as follows:

– With ignition switched on press button -arrow A- below the speedometer and hold.

– Switch off ignition and release button. The inscription “OIL” is indicated in the display.

– Press the lower of both buttons -arrow B- of digital clock until five dashes are indicated (- - - - -). Only then the service is reset.

– By pressing the button again -arrow A-, below the speedometer, the other services are indicated and can be reset individually.

– Switch on ignition and if “IN 00” appears, switch off.

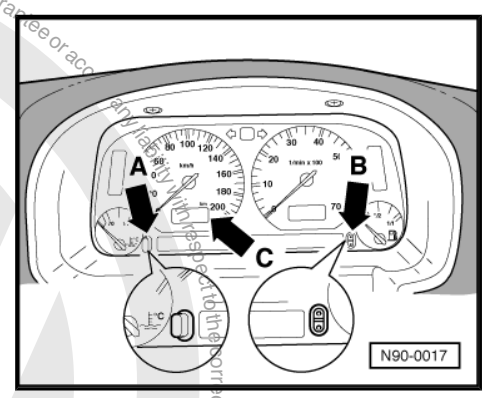

4.4.3 Vehicles 10.99►

Between services, only the total distance and distance travelled (trip recorder) is shown in the distance display -2-.

If a service is due, the following is indicated in the distance display -2- below the total mileage:

- with ignition switched off “service”.
- after the ignition is switched on and up to 3 minutes after the engine is started the type of service (service table).

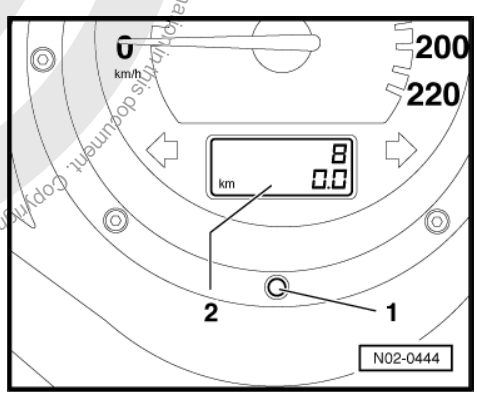

Note

After the engine is started the display switches back to “service” after 3 minutes.

Service table

Indicated on display:	Type of Service:
Mileage and service OIL	Oil change service every 15,000 km
or:	
Mileage and service INSP	Inspection service every 12 months or every 30,000 km (whichever occurs first)

One or both service types must be reset depending on which service was completed, therefore:

- If a “service OIL” (oil change service every 15,000 km) is carried out, only “service OIL” must be reset.
- If “service INSP” (inspection service every 12 months or every 30,000 km) has been performed “service INSP” and “service OIL” must be reset.

Protected by copyright. Copyright by Volkswagen AG.
Copy or publication, in part or on whole, is permitted only for internal and non-commercial purposes, unless authorised by Volkswagen AG. Volkswagen AG does not guarantee or accept any liability with respect to the correctness of information in this document. Copyright by Volkswagen AG.
satelettronica

- If a “service INSP” (inspection service every 12 months or every 30,000 km) without an oil change has been performed, then only “service INSP” must be reset.

The service interval display can be reset using one of three methods:

- With adjustment button for the distance display on dash panel insert ⇒ page 37 ,
- With fault reader - V.A.G 1551- ⇒ page 37
- Vehicle diagnosis, testing and information system - VAS 5051B- or subsequent units ⇒ page 44

4.4.4 Resetting service interval display with adjustment button for distance display on dash panel insert

The service interval display must be reset (adapted) during

- delivery inspection
- every oil change service
- every inspection

service interval display must be reset.

Note

- *For delivery inspection it is not possible to reset the service interval display with the adjustment button for the trip recorder in dash panel insert.*
- *Each service must be reset individually as only the distance recorder and time counter of the actual service can be reset.*

Reset the display as follows:

– Switch off ignition.
– Press and hold button -1- below the distance display.
– Switch on ignition and hold button -1- depressed (min. 10 seconds) until three dashes (- - -) or the next service appears in the display. Only then the service is reset.
– Release button -1-.
– Switch off ignition.

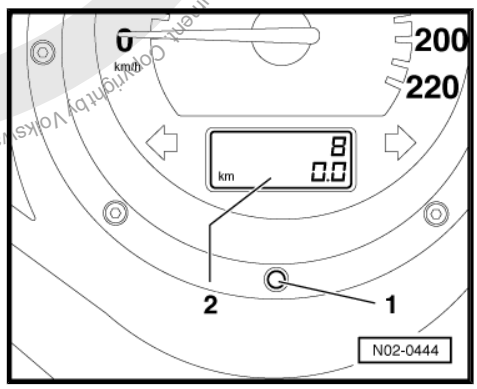

After resetting the service interval display the previous trip recorder display is indicated again.

Note

- *Note that only the actual service type indicated on display can be reset.*
- *To reset a further service, repeat these steps.*

4.4.5 Resetting service interval display with fault reader - V.A.G 1551-

The service interval display must be reset during

- delivery inspection

Protected by copyright. Copyright by Volkswagen AG. Volkswagen AG does not guarantee or accept any liability with respect to the correctness of information in this document. Copyright by Volkswagen AG. Protected by copyright. Copy, distribute or create or compilation of part or in whole is not permitted unless authorised by Volkswagen AG.
satelettronica

Protected by copyright. Copyright by Volkswagen AG. Volkswagen AG does not guarantee or accept any liability with respect to the correctness of information in this document. Copyright by Volkswagen AG. Volkswagen AG, is not permitted unless authorised by Volkswagen AG. Volkswagen AG does not guarantee or accept any liability with respect to the correctness of information in this document. Copyright by Volkswagen AG.

- every oil change service
- every inspection

(adapted).

Carry out following procedure:

Connecting fault reader - V.A.G 1551- ⇒ page 20

– Apply handbrake.

– Automatic gearbox: Move selector lever to position “P” or “N”.

– Manual gearbox: gear lever in neutral.

Indicated on display:

```
V.A.G - SELF DIAGNOSIS HELP
1 - Rapid data transfer
```

or

```
V.A.G - SELF DIAGNOSIS HELP
2 - Flash code output
```

Appears alternately

– Switch on ignition.

– Switch on printer with [Print] button (warning lamp in button lights up).

– Press button [1] to select “Rapid data transfer” mode.

Indicated on display:

```
Rapid data transfer HELP
Enter address word XX
```

– Press keys [1] and [7]. “17” enters the address word “dash panel insert”.

Indicated on display:

```
Rapid data transfer Q
17 Dash panel insert
```

– Confirm entry with [Q] button.

Indicated on display:

```
9K0919860 Dash panel insert MM0 V27 ->
Coding 00141 WSC 00000
```

The control unit identification and the coding will be displayed:

- Top line Part No. of control unit, system designation dash panel insert, manufacturer's code version number
- Lower line code number [5] dealership number [6]

5) Dependent on engine, gearbox, additional equipment and country version

6) Is automatically stored in control unit when entering system.

Will be indicated on display:

```
Control unit does not answer! HELP
```

– By pressing the [HELP] key a list of possible fault causes is printed out.

– After rectifying faults again enter address word 17 for dash panel insert and confirm with [Q] key.

Indicated on display:

```
9K0919860 Dash panel insert MM0 V27 ->
Coding 00141 WSC 00000
```

– Press [→] button.

Indicated on display:

```
Rapid data transfer HELP
Select function XX
```

– Press keys [1] and [0]. (10 selects the function “Adaption”.)

Indicated on display:

```
Rapid data transfer Q
10 - Adaption
```

satelettronica

– Confirm entry with Q key.

Indicated on display:

```
Adaption
Enter channel number XX
```

– Select adaption channel of service to be reset:

- for display “service OIL” channel 10
- for display “service INSP” channel 10, 11 and 12

Adaption table

Service	Adaption channel	Counter content	Adaption value to reset
service OIL	10	Distance in 100s of km	00150
service INSP	11	Distance in 100s of km	00300
service INSP	12	Time in days	00360

Copyright by Volkswagen AG. Volkswagen AG does not guarantee or accept any liability with respect to the correctness of information in this document. Copying or distribution to third parties, in whole or in part, is not permitted unless authorised by Volkswagen AG. Copyright or other protected by copyright. Copyright or private or commercial purposes, in part or in whole, is not permitted unless authorised by Volkswagen AG.

Note

- *Entering the relevant adaption values for the distance recorder is only possible in steps of 100 km. Therefore this is shown on the display in 100 km.*
- *The adaption value entered must contain 5-digits (e.g. 00150 for adaption value 150 this equates to a distance of 15,000 km to next service).*
- *The entered values count down to 0 km.*
- *The procedure is the same for vehicles with a distance display in miles. This means that the same adaption figures (numbers) should be entered as for a distance display in kilometres.*
- *The counter for “INSP service” can be adapted to max. 360 days.*
- *It is only possible to make direct entries using the keyboard of the fault reader!*
- *When entering an incorrect value the function “Adaption” is ended and must be restarted again!*

Resetting service interval display “service OIL” (oil change service)

Indicated on display:

```
Rapid data transfer HELP
Select function XX
```

– Press keys 1 and 0. (10 selects the function “Adaption”.)

Indicated on display:

```
Rapid data transfer Q
10 - Adaption
```

– Confirm entry with Q key.

Indicated on display:

```
Adaption
Enter channel number XX
```

– Press keys 1 and 0.

Indicated on display:

```
Adaption Q
Enter channel number 10
```

– Confirm entry with Q key.

Indicated on display: The actual reading of the distance recorder is displayed for “service OIL” (e.g. here 0 equates to 0 km), i.e. the oil change service must be performed.

```
Channel 10 Adaption 0 ->
Actual value oil in 100 km <-13->
```

satelettronica

– Press [→] button.

Indicated on display:

```
Channel 10 Adaption 0
Enter adaption value XXXXX
```

To reset the service interval display for “service OIL” the distance recorder must be reset to 150 (equates to 15,000 km):

Note

The procedure is the same for vehicles with a distance display in miles. This means that the same adaption figures (numbers) should be entered as for an distance display in kilometres.

– Enter adaption value 00150.

Indicated on display:

```
Channel 10 Adaption 0 Q
Enter adaption value 00150
```

– Confirm entry with [Q] key.

Indicated on display after entering adaption value 00150:

```
Channel 10 Adaption 150 Q
Actual value oil in 100 km <-13->
```

– Confirm entry with [Q] key.

Indicated on display:

```
Channel 10 Adaption 150 Q
Save modified value?
```

– Confirm entry with [Q] key.

Indicated on display:

```
Channel 10 Adaption 150 ->
Modified value is saved
```

– Press [→] button.

Indicated on display:

```
Rapid data transfer HELP
Select function XX
```

– End output.

Reset service interval display: “service INSP” (inspection every 12 months)

Indicated on display:

```
Rapid data transfer HELP
Select function XX
```

– Press keys [1] and [0]. (10 selects the function “Adaption”.)

Indicated on display:

```
Rapid data transfer Q
10    Adaption
```

– Confirm entry with [Q] key.

Indicated on display:

```
Adaption
Enter channel number XX
```

– Press keys [1] and [2].

Indicated on display:

```
Adaption Q
Enter channel number 12
```

– Confirm entry with [Q] key.

Indicated on display: The actual reading of the time recorder is displayed for “service INSP” (e.g. here 0 equates to 0 days), this means the inspection service must be performed.

```
Channel 12 Adaption 0 ->
Actual value Insp. in 1 days <-1 3->
```

– Press [→] button.

Indicated on display:

```
Channel 12 Adaption 0
Enter adaption value XXXXX
```

Protected by copyright. Copying for private or commercial purposes, in part or in whole, is not permitted unless authorised by Volkswagen AG. Volkswagen AG does not guarantee or accept any liability with respect to the correctness of information in this document. Copyright by Volkswagen AG.

satelettronica

To reset the service interval display for “service INSP” the time recorder must be reset to 360 (equates to 360 days):

– Enter adaption value 00360

Indicated on display:

```
Channel 12 Adaption 0 Q
Enter adaption value 00360
```

– Confirm entry with Q key.

Indicated on display after entering adaption value 00360:

```
Channel 12 Adaption 360 Q
 Actual value Insp. in 1 days <-1 3->
```

– Confirm entry with Q key.

Indicated on display:

```
Channel 12 Adaption 360 Q
Save modified value?
```

– Confirm entry with Q key.

Indicated on display:

```
Channel 12 Adaption 360 ->
Modified value is saved
```

– Press ⇥ button.

Indicated on display:

```
Rapid data transfer HELP
Select function XX
```

Note

- *If an inspection service with oil change service has been performed the “service OIL” service must also be reset.*
- *If an inspection service without oil change service has been performed, the output must be terminated.*

Reset service interval display: “service INSP” (inspection every 30,000 km)

Indicated on display:

```
Rapid data transfer HELP
Select function XX
```

– Press keys 1 and 0. (10 selects the function “Adaption”.)

Indicated on display:

```
Rapid data transfer Q
10 - Adaption
```

– Confirm entry with Q key.

Indicated on display:

```
Adaption
Enter channel number XX
```

– Press keys 1 and 1.

Indicated on display:

```
Adaption Q
Enter channel number 11
```

– Confirm entry with Q key.

Indicated on display: The actual reading of the distance recorder for “service INSP” is displayed (e.g. here 0 equates to 0 km), this means the inspection service must be performed.

```
Channel 11 Adaption 0 ->
 Actual value Insp. in 100 km <-1 3->
```

– Press ↵ button.

Indicated on display:

```
Channel 11 Adaption 0
Enter adaption value XXXXX
```

To reset the service interval display for “service INSP” the distance recorder must be reset to 300 (equates to 30,000 km):

Protected by copyright. Copying for commercial purposes, in part or in whole is not permitted unless authorised by Volkswagen AG. Volkswagen AG does not guarantee or accept any liability with respect to the correctness of information in this document. Copyright by Volkswagen AG.

satelettronica

Note

The procedure is the same for vehicles with a distance display in miles. This means that the same adaption figures (numbers) should be entered as for an distance display in kilometres.

– Enter adaption value 00300.

Indicated on display:

```
Channel 11 Adaption 0 Q
Enter adaption value 00300
```

– Confirm entry with Q key.

Indicated on display after entering adaption value 00300:

```
Channel 11 Adaption 300 Q
 Actual value Insp. in 100 km <-1 3->
```

– Confirm entry with Q key.

Indicated on display:

```
Channel 11 Adaption 300 Q
Save modified value?
```

– Confirm entry with Q key.

Indicated on display:

```
Channel 11 Adaption 300 ->
Modified value is saved
```

– Press → button.

Indicated on display:

```
Rapid data transfer HELP
Select function XX
```

– Press keys 1 and 0. (10 selects the function “Adaption”.)

Indicated on display:

```
Rapid data transfer Q
10 - Adaption
```

– Confirm entry with Q key.

Indicated on display:

```
Adaption
Enter channel number XX
```

– Press keys 1 and 2.

Indicated on display:

```
Adaption Q
Enter channel number 12
```

– Confirm entry with Q key.

Indicated on display: The actual reading of the time recorder is displayed for “service INSP” (e.g. here 0 equates to 0 days), this means the inspection service must be performed.

```
Channel 12 Adaption 0 ->
 Actual value Insp. in 1 days <-1 3->
```

– Press → button.

Indicated on display:

```
Channel 12 Adaption 0
Enter adaption value XXXXX
```

To reset the service interval display for “service INSP” the time recorder must be reset to 360 (equates to 360 days):

– Enter adaption value 00360

Indicated on display:

```
Channel 12 Adaption 0 Q
Enter adaption value 00360
```

– Confirm entry with Q key.

Indicated on display after entering adaption value 00360:

```
Channel 12 Adaption 360 Q
 Actual value Insp. in 1 days <-1 3->
```

– Confirm entry with Q key.

Protected by copyright. Copying for private or commercial purposes, in part or in whole is not permitted unless authorised by Volkswagen AG. Volkswagen AG does not guarantee or accept any liability with respect to the correctness of information in this document. Copyright by Volkswagen AG.
satelettronica

Indicated on display:

```
Channel 12 Adaption 360 Q
Save modified value?
```

– Confirm entry with Q key.

Indicated on display:

```
Channel 12 Adaption 360 ->
Modified value is saved
```

– Press ↵ button.

Indicated on display:

```
Rapid data transfer HELP
Select function XX
```

– Press keys 1 and 0. (10 selects the function “Adaption”.)

Indicated on display:

```
Rapid data transfer Q
10 - Adaption
```

– Confirm entry with Q key.

Indicated on display:

```
Adaption
Enter channel number XX
```

– Press keys 1 and 0.

Indicated on display:

```
Adaption Q
Enter channel number 10
```

– Confirm entry with Q key.

Indicated on display: The actual reading of the distance recorder is displayed for “service OIL” (e.g. here 0 equates to 0 km).

```
Channel 10 Adaption 0 ->
Actual value oil in 100 km <-13->
```

– Press ↵ button.

Indicated on display:

```
Channel 10 Adaption 0
Enter adaption value XXXXX
```

To reset the service interval display for “service OIL” the distance recorder must be reset to 150 (equates to 15,000 km):

Note

The procedure is the same for vehicles with a distance display in miles. This means that the same adaption figures (numbers) should be entered as for an distance display in kilometres.

– Enter adaption value 00150.

Indicated on display:

```
Channel 10 Adaption 0 Q
Enter adaption value 00150
```

– Confirm entry with Q key.

Indicated on display after entering adaption value 00150:

```
Channel 10 Adaption 150 Q
 Actual value oil in 100 km <-13->
```

– Confirm entry with Q key.

Indicated on display:

```
Channel 10 Adaption 150 Q
Save modified value?
```

– Confirm entry with Q key.

Indicated on display:

```
Channel 10 Adaption 150 ->
Modified value is saved
```

– Press ↵ button.

Indicated on display:

```
Rapid data transfer HELP
Select function XX
```

Protected by copyright. Copying for private or commercial purposes, in part or in whole, is not permitted unless authorised by Volkswagen AG. Volkswagen AG does not guarantee or accept any liability with respect to the correctness of information in this document. Copyright by Volkswagen AG.
satelettronica

End output

– Press keys 0 and 6. (06 selects the function “End output”.)

Indicated on display:

```
Rapid data transfer Q
06 End output
```

– Confirm entry with Q key.

Indicated on display:

```
Rapid data transfer HELP
Enter address word XX
```

– Observe distance display in dash panel insert.

– Switch off ignition and separate diagnosis connections.

– Switch on ignition.

After the ignition is switched on, the type of service is no longer displayed in the distance display in the dash panel insert.

The service interval display is now reset.

– Switch off ignition.

– Install ashtray insert.

4.4.6 Resetting service interval display using vehicle diagnosis, testing and information system - VAS 5051B- or subsequent units

The service interval display must be reset (adapted) during

- delivery inspection
- every oil change service
- every inspection

.

Note

Observe actual operating instructions for Vehicle diagnosis, testing and information system - VAS 5051B- or subsequent units which are shown on display after selecting the functions `Administration` *and* `Operating manual`.

Connecting vehicle diagnosis, testing and information system - VAS 5051B- or subsequent units ⇒ page 20

– Apply handbrake.

– Automatic gearbox: Move selector lever to position “P” or “N”.

– Manual gearbox: gear lever in neutral.

With ignition switched off connect fault reader as follows:

Protected by copyright. Copying for private or commercial purposes, in part or in whole, is not permitted unless authorised by Volkswagen AG. Volkswagen AG does not guarantee or accept any liability with respect to the correctness of information in this document. Copyright by Volkswagen AG.
satelettronica

– Pull ashtray insert out of centre console.
– Switch on ignition.

Selecting operating mode

– Select operating mode `Vehicle self-diagnosis` on display -arrow-.

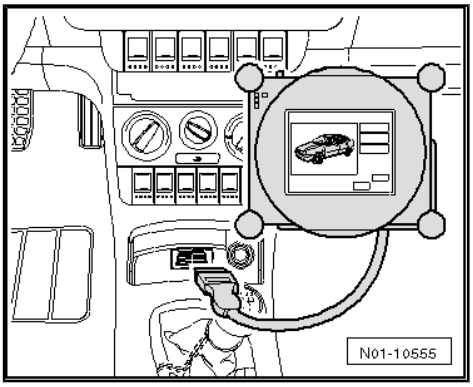

Indicated on display:

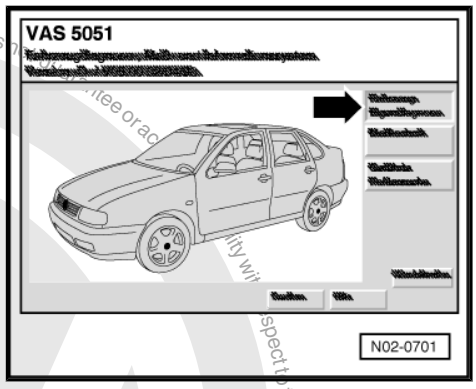

Indicated on display:

Selecting vehicle system

– Press `17 - Dash panel insert` on display -arrow-.

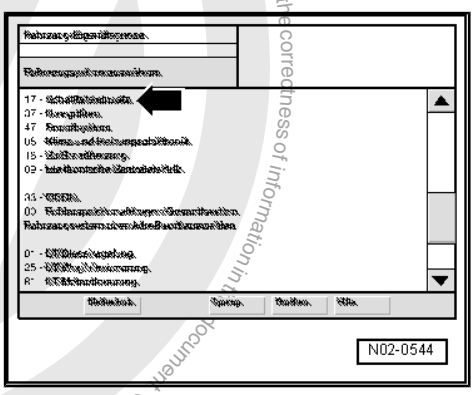

Indicated on display:

The control unit identification and coding are displayed -arrow-.

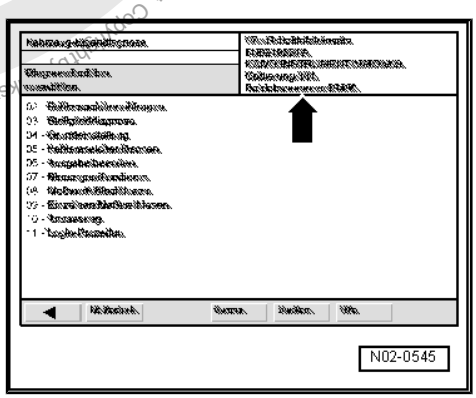

Protected by copyright. Copying for private or commercial purposes, in part or in whole, is not permitted unless authorised by Volkswagen AG. Volkswagen AG does not guarantee or accept any liability with respect to the correctness of information in this document. Copyright by Volkswagen AG.
satelettronica

Indicated on display:

– Press `10 - Adaption` on display -arrow-.

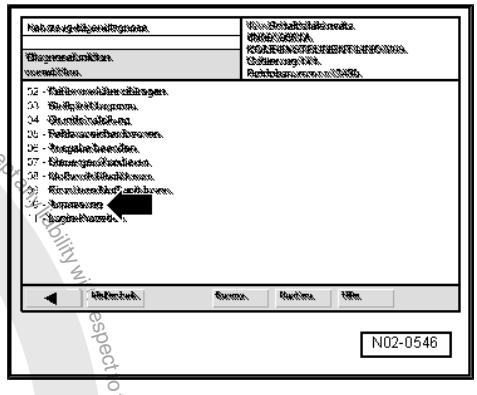

Indicated on display:

– Press the adaption channel for the service which is to be reset on the display number block -arrow-:

- for display “service OIL” on dash panel insert channel 10
- for display “service INSP” on dash panel insert channel 10, 11 and 12

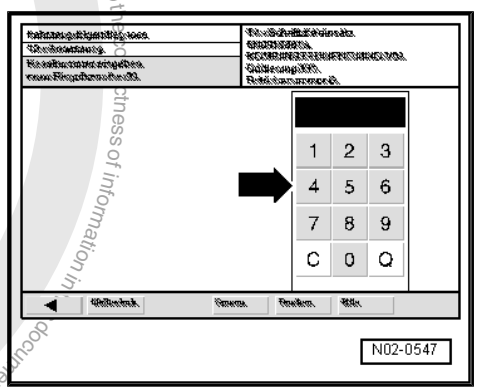

Adaption table

Service	Adaption channel	Counter content	Adaption value to reset
service OIL	10	Distance in 100s of km	150
service INSP	11	Distance in 100s of km	300
service INSP	12	Time in days	360

Note

- *Entering the relevant adaption values for the distance recorder is only possible in steps of 100 km. Therefore this is shown on the display in 100 km.*
- *The entered values count down to 0 km.*
- *The procedure is the same for vehicles with a distance display in miles. This means that the same adaption figures (numbers) should be entered as for a distance display in kilometres.*
- *The counter for “INSP service” can be adapted to max. 360 days.*

Protected by copyright. Copying for private or commercial purposes, in part or in whole, is not permitted unless authorised by Volkswagen AG. Volkswagen AG does not guarantee or accept any liability with respect to the correctness of information in this document. Copyright by Volkswagen AG.

satelettronica

Resetting service interval display “service OIL” (oil change service)

Indicated on display:

– Press buttons 1 and 0 on display number block -arrow-.

– Confirm entry with Q key on display number block.

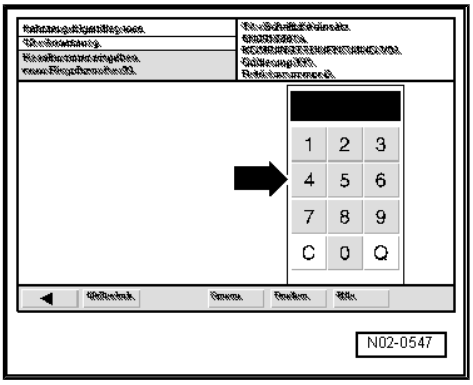

Indicated on display:

– Move the position indicator -arrow- on the display until 150 is displayed over the scroll bar -1- (equates to 15,000 km).

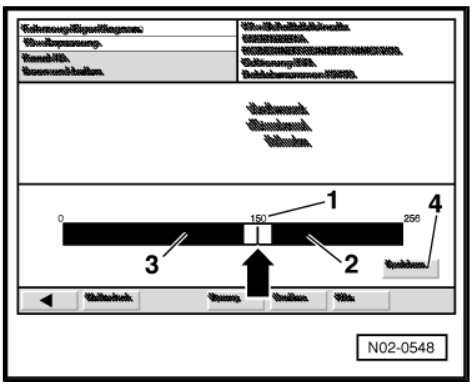

Note

- *Pressing the scroll bar briefly to the right -2- of the position indicator moves the value to the next number.*
- *Pressing the scroll bar briefly on the left -3- of the position indicator moves the value to the previous number.*

– Press the Save button on display -4-.

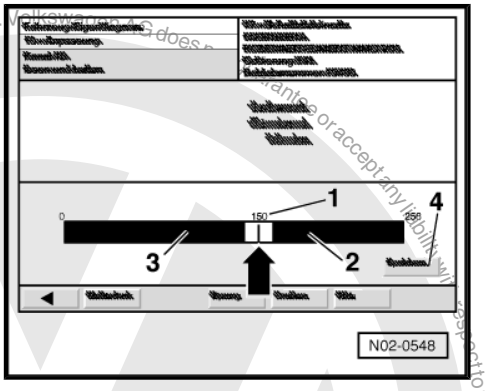

Note

The procedure is the same for vehicles with a distance display in miles. This means that the same adaption figures (numbers) should be entered as for an distance display in kilometres.

Indicated on display:

– Press the Accept button on display -arrow-.

– End output.

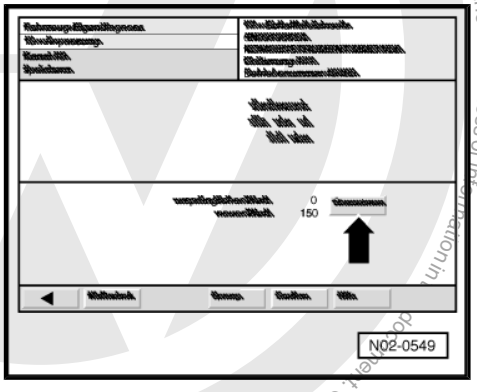

Reset service interval display: “service INSP” (inspection every 12 months)

Protected by copyright. Copying for private or commercial purposes, in part or in whole, is not permitted unless authorised by Volkswagen AG. Volkswagen AG does not guarantee or accept any liability with respect to the correctness of information in this document. Copyright by Volkswagen AG.
satelettronica

Indicated on display:

– Press buttons 1 and 2 on display number block -arrow-.

– Confirm entry with Q key on display number block.

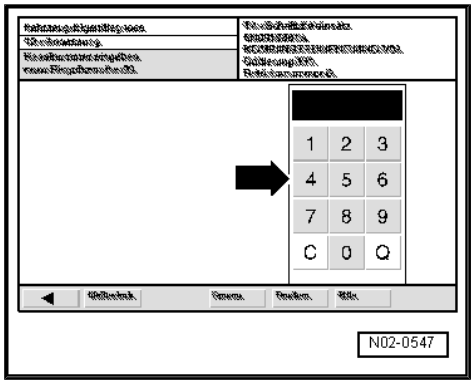

Indicated on display:

– Move the position indicator -arrow- on the display until -1- 360 is displayed over the scroll bar (equates 360 days).

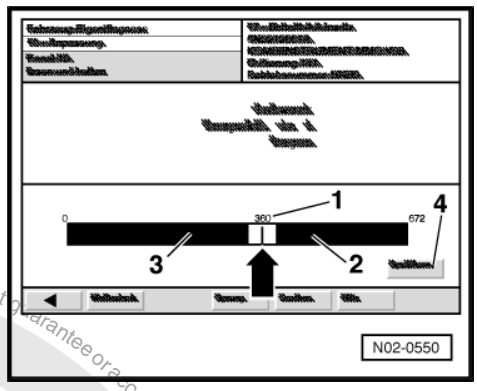

Note

- *Pressing the scroll bar briefly to the right -2- of the position indicator moves the value to the next number.*
- *Pressing the scroll bar briefly on the left -3- of the position indicator moves the value to the previous number.*

– Press the Save button on display -4-.

Indicated on display:

– Press the Accept button on display -arrow-.

If an inspection service was performed without oil change, end output.

If an inspection service was performed with an oil change, continue as follows:

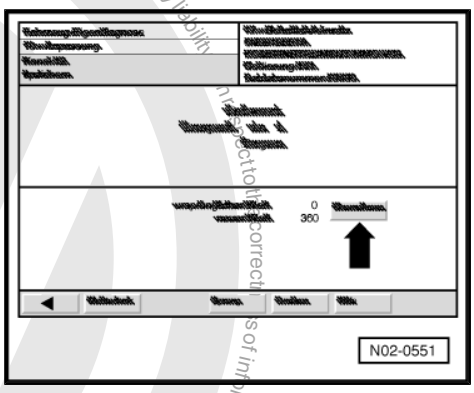

Indicated on display:

– Press < -arrow- on display.

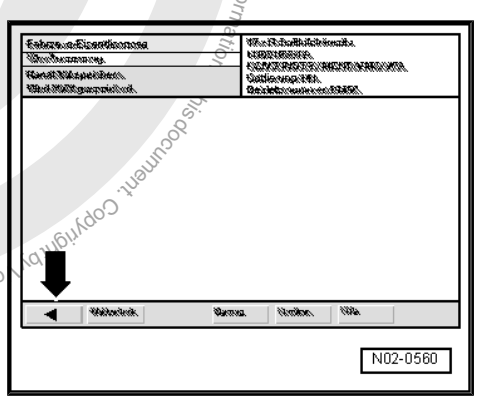

Protected by copyright. Copying for private or commercial purposes, in part or in whole, is not permitted unless authorised by Volkswagen AG. Volkswagen AG does not guarantee or accept any liability with respect to the correctness of information in this document. Copyright by Volkswagen AG.

satelettronica

Indicated on display:

– Press 10 - Adaption on display -arrow-.

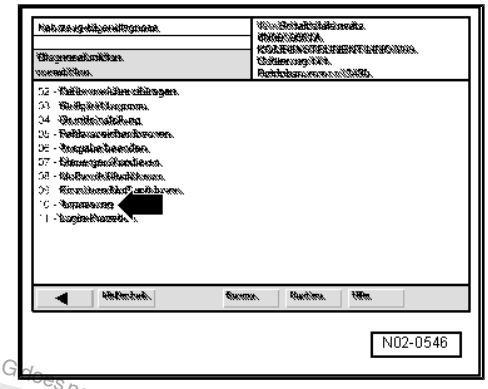

Indicated on display:

– Press buttons 1 and 0 on display number block -arrow-.

– Confirm entry with Q key on display number block.

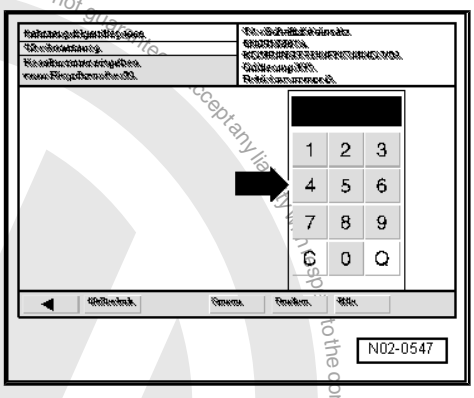

Indicated on display:

– Move the position indicator -arrow- on the display until 150 is displayed over the scroll bar -1- (equates to 15,000 km).

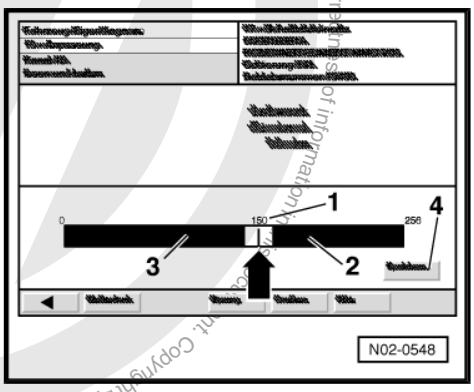

Note

- *Pressing the scroll bar briefly to the right -2- of the position indicator moves the value to the next number.*
- *Pressing the scroll bar briefly on the left -3- of the position indicator moves the value to the previous number.*

– Press the Save button on display -4-.

Note

The procedure is the same for vehicles with a distance display in miles. This means that the same adaption figures (numbers) should be entered as for an distance display in kilometres.

Indicated on display:

– Press the Accept button on display -arrow-.

– End output.

Reset service interval display: “service INSP” (inspection every 30,000 km)

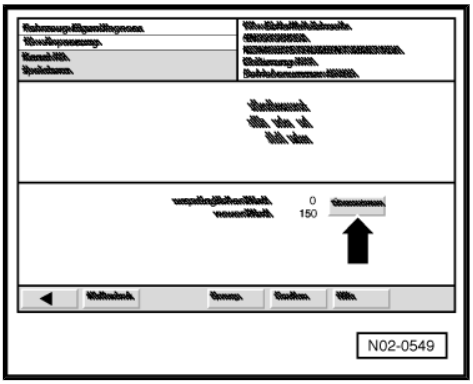

Protected by copyright. Copying for private or commercial purposes, in part or in whole, is not permitted unless authorised by Volkswagen AG. Volkswagen AG does not guarantee or accept any liability with respect to the correctness of information. Copyright by Volkswagen AG.
satelettronica

Indicated on display:

– Press buttons 1 and 1 on display number block -arrow-.

– Confirm entry with Q key on display number block.

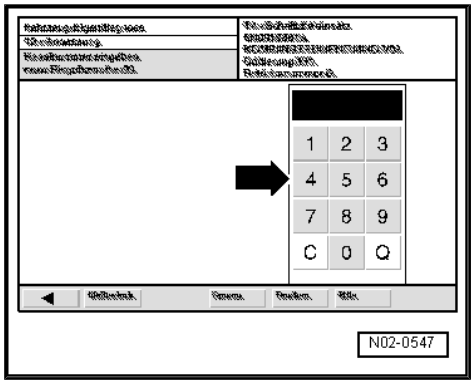

Indicated on display:

– Move the position indicator -arrow- on the display until 300 is displayed over the scroll bar -1- (equates to 30,000 km).

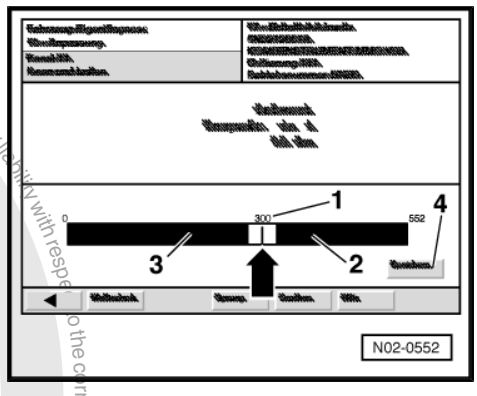

Note

- *Pressing the scroll bar briefly to the right -2- of the position indicator moves the value to the next number.*
- *Pressing the scroll bar briefly on the left -3- of the position indicator moves the value to the previous number.*

Press the Save button on display -4-.

Note

The procedure is the same for vehicles with a distance display in miles. This means that the same adaption figures (numbers) should be entered as for an distance display in kilometres.

Indicated on display:

– Press the Accept button on display -arrow-.

For the inspection every 30,000 km, also the inspection service every 12 months and the oil change service must be reset as follows:

Indicated on display:

– Press < -arrow- on display.

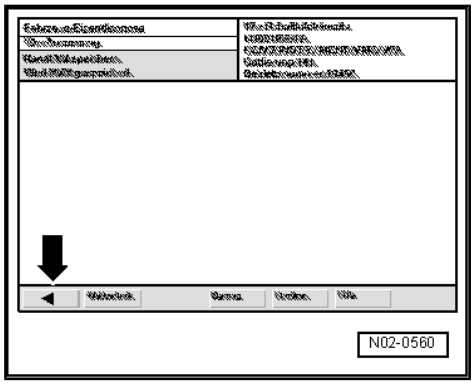

Protected by Volkswagen AG. Volkswagen AG does not guarantee or accept any liability with respect to the correctness of information in this document. Copyright by Volkswagen AG.
Protected by copyright. Copying for private or commercial purposes, in part or in whole, is not permitted unless authorised by Volkswagen AG.

satelettronica

Indicated on display:

– Press 10 - Adaption on display -arrow-.

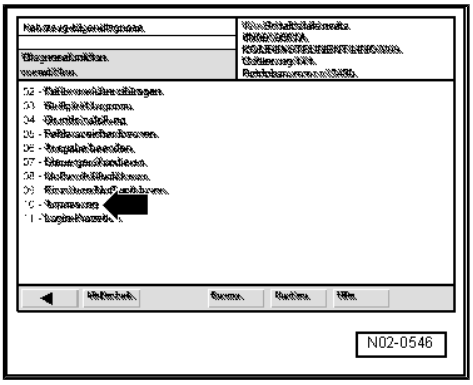

Indicated on display:

– Press buttons 1 and 2 on display number block -arrow-.

– Confirm entry with Q key on display number block.

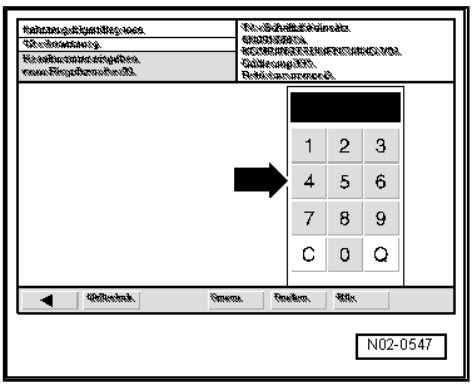

Indicated on display:

– Move the position indicator -arrow- on the display until -1- 360 is displayed over the scroll bar (equates 360 days).

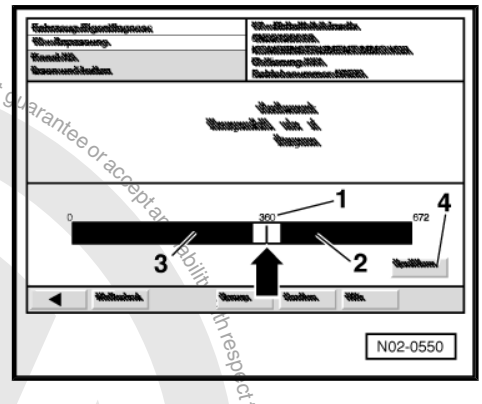

Note

- *Pressing the scroll bar briefly to the right -2- of the position indicator moves the value to the next number.*
- *Pressing the scroll bar briefly on the left -3- of the position indicator moves the value to the previous number.*

– Press the Save button on display -4-.

Indicated on display:

– Press the Accept button on display -arrow-.

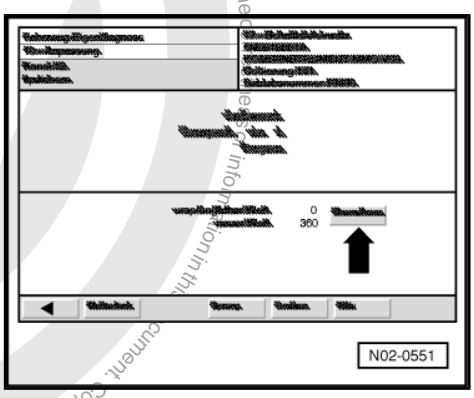

Protected by copyright. Copying for private or commercial purposes, in part or in whole, is not permitted unless authorised by Volkswagen AG. Volkswagen AG does not guarantee or accept any liability with respect to the correctness of information in this document. Copyright by Volkswagen AG.
satelettronica

Indicated on display:

– Press < -arrow- on display.

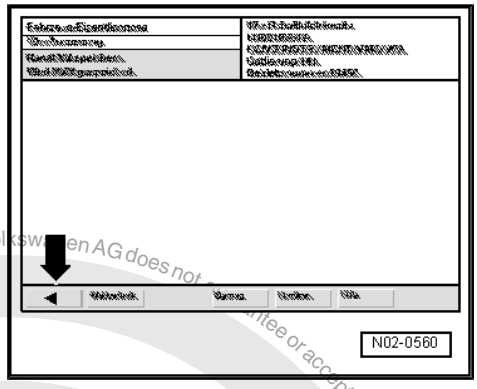

Indicated on display:

– Press 10 - Adaption on display -arrow-.

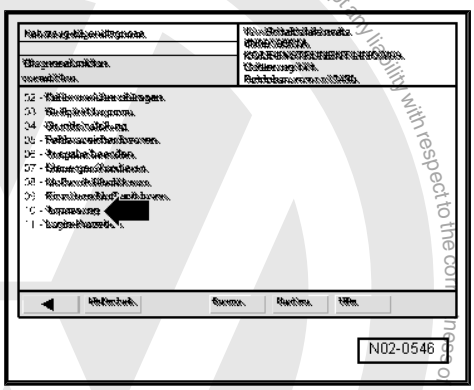

Indicated on display:

– Press buttons 1 and 0 on display number block -arrow-.

– Confirm entry with Q key on display number block.

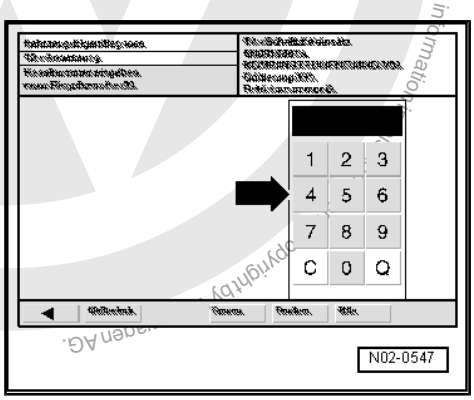

Indicated on display:

– Move the position indicator -arrow- on the display until 150 is displayed over the scroll bar -1- (equates to 15,000 km).

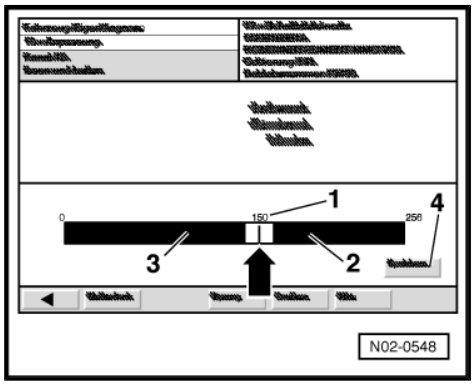

Note

- *Pressing the scroll bar briefly to the right -2- of the position indicator moves the value to the next number.*
- *Pressing the scroll bar briefly on the left -3- of the position indicator moves the value to the previous number.*

– Press the Save button on display -4-.

Note

The procedure is the same for vehicles with a distance display in miles. This means that the same adaption figures (numbers) should be entered as for an distance display in kilometres.

Protected by copyright. Copying for private or commercial purposes, in part or in whole, is not permitted unless authorised by Volkswagen AG. Volkswagen AG does not guarantee or accept any liability with respect to the correctness of information.
Copyright by Volkswagen AG.
satelettronica

Indicated on display:

– Press the Accept button on display -arrow-.

– End output.

End output

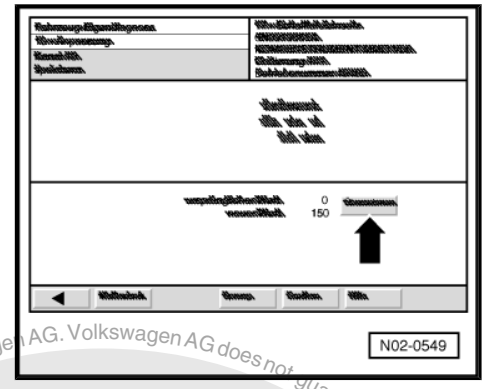

Indicated on display:

– Press the GoTo button on display -arrow-.

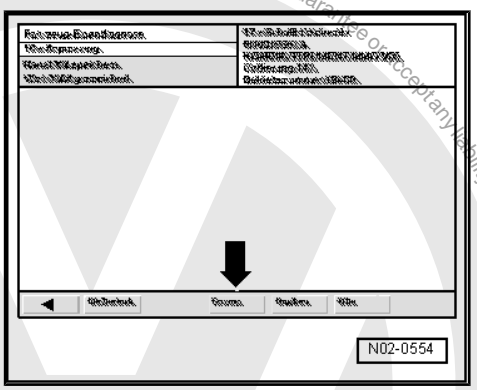

Indicated on display:

– Press the End button on display -arrow-.

– Press End button in End menu.

– Switch off ignition and separate diagnosis connections.

– Switch on ignition.

After the ignition is switched on, the type of service is no longer displayed in the distance display in the dash panel insert.

The service interval display is now reset.

– Switch off ignition.

– Install ashtray insert.

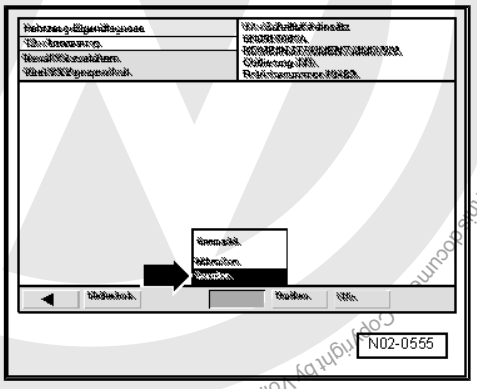

4.5 Door arrester and securing pins: lubricating

Carry out following procedure:

– Grease door arrester and securing pin at points shown -arrows-.

– Grease door arrester in side area -arrow A- with grease -G 000 400- .

– Grease securing pin -arrow B- with lock cylinder lubricant spray -G 000 400 01- .

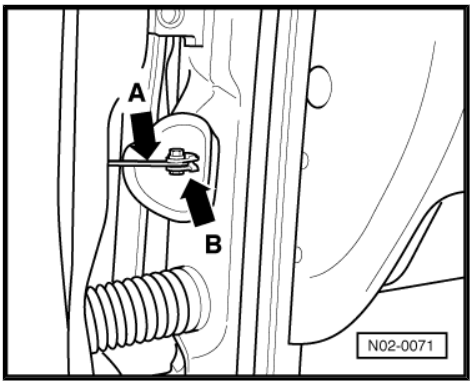

Protected by copyright. Copying for private or commercial purposes, in part or in whole, is not permitted unless authorised by Volkswagen AG. Volkswagen AG does not guarantee or accept any liability with respect to the correctness of information in this document. Copyright by Volkswagen AG.
satelettronica

4.6 Sunroof: checking function, cleaning and greasing guide rails

Carry out following procedure:

– Check function of sunroof.

– Clean guide rails -arrows-, and lubricate them with special grease -G 000 450 02- .

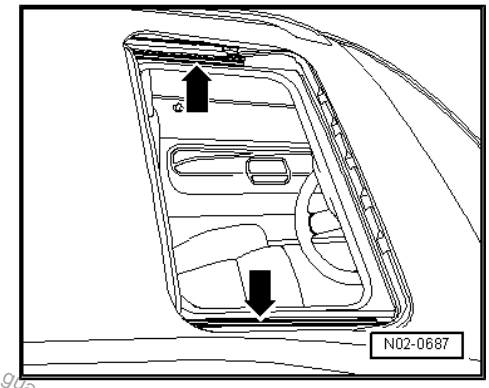

4.7 Electric windows: initialising

Note

The automatic opening and closing features for the electric windows do not function after disconnecting and reconnecting the vehicle battery. The electric windows must be initialised before a new vehicle is delivered. The vehicle battery must not be disconnected after initialisation.

WARNING

After vehicle battery has been disconnected and reconnected the roll-back function of the electric window regulators is disabled. Severe pinching injuries could result!

Carry out the following procedure to initialise the electric windows:

– Close all doors and windows completely.

– Lock vehicle from outside at driver door or front passenger door.

– Unlock vehicle.

– Lock vehicle again from outside at driver door or front passenger door. Hold key in lock position for at least 1 second.

4.8 Clock: setting to correct time

4.8.1 Vehicles ►09.99

Carry out adjustment as follows:

Copyright. Copying for private or commercial purposes, in part or in whole, is not permitted unless authorised by Volkswagen AG. Volkswagen AG does not guarantee or accept any liability with respect to the correctness of information in this document. Copyright by Volkswagen AG.

satelettronica

To set the time there are two press buttons -arrow B- in lower right of dash panel insert. The hours are set with the upper button, the minutes are set with the lower button.

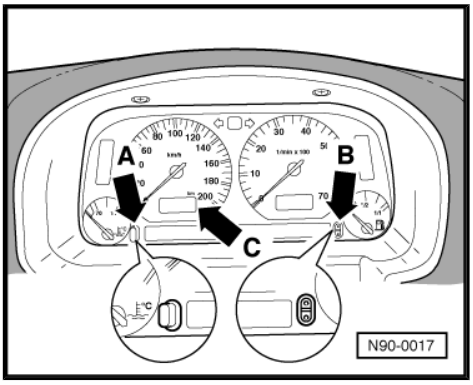

Setting hours

– Press briefly, preferably with a ball pen on upper button, to advance the time one hour. Pressing the button continuously speeds up selection of hours.

Setting minutes

– Press briefly, preferably with a ball pen on lower button, to advance the time one minute. Pressing the button continuously speeds up selection of minutes.

With the minute button the clock can be set exactly to the second

– Press button until time is one minute before time to be set. Turn button at the moment when the seconds indicator of accurate clock shows a full minute.

4.8.2 Vehicles 10.99►

Carry out adjustment as follows:

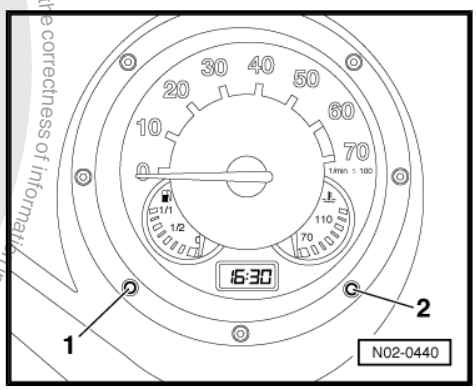

Setting hours

– Press briefly, preferably with a ball pen on button -1-, to advance the time one hour. Pressing the button continuously speeds up selection of hours.

Setting minutes

– Press briefly, preferably with a ball pen on button -2-, to advance the time one minute. Pressing the button continuously speeds up selection of minutes.

With the minute button the clock can be set exactly to the second.

– Press button until time is one minute before time to be set. Turn button at the moment when the seconds indicator of accurate clock shows a full minute.

4.9 Radio: activating anti-theft coding

The radio units and radio-navigation systems are supplied with a fixed code. Fixed code means that each unit with an anti-theft coding is programmed with its own code number. This fixed code is not active when leaving the factory.

Activate fixed code on “alpha” radio units as follows:

The security coding of the ready to play radio is not activated until the fixed code is entered. The fixed code is to be activated as follows:

– Switch radio unit on.

– “SAFE” appears on digital display.

– Press buttons TP and TA -1- simultaneously until “1000” appears on the digital display. Release buttons.

– With the help of station buttons 1 to 4 enter code number applied on radio card. Press button 1 to enter the first digit of code number, button 2 to enter the second digit and so on.

satelettronica

– Then press buttons TP and TA -1- simultaneously again and hold down until “SAFE” appears on the frequency display. Release buttons. Soon afterwards a frequency will automatically appear.

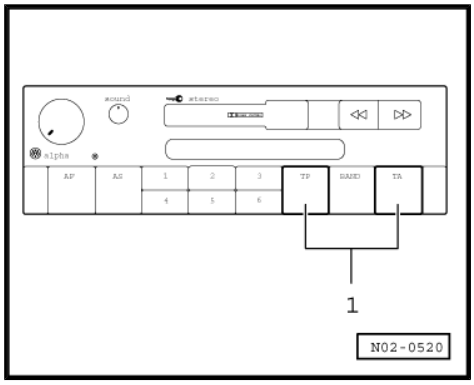

If the fixed code number has been entered correctly in the radio unit, the LED located next to the unit name must flash when the ignition key is removed. When the diode flashes the radio is ready-for-use and the anti-theft coding is activated.

On radio units “beta and gamma” activate the fixed code as follows:

– Switch radio unit on.

– “SAFE” appears on digital display.

– After approx. 3 seconds “1000” appears on display.

– With the help of station buttons 1 to 4 enter code number applied on radio card. Press button 1 to enter the first digit of code number, button 2 to enter the second digit and so on.

– Then press the search function -1- or manual setting -2- rocker switch for longer than 2 seconds. Release button.

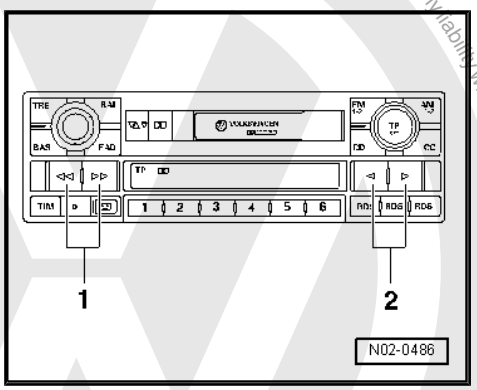

If the correct code has been entered, the actual radio frequency will appear after a short “learning phase”. During this pause the stations with the best reception will be automatically stored to an internal memory list and can be called up. The LED on the lower left of the radio must flash when the ignition key is removed. When the diode flashes the radio is ready-for-use and the anti-theft coding is activated.

4.10 Window wash/wipe system and headlight washer system: checking function and settings

Checking Windscreen Clear with anti-freeze of windscreen wash/wipe system, replenishing with fluid if necessary ⇒ page 56

Windscreen wash/wipe system: Check spray jet settings, adjust if necessary ⇒ page 58

Headlight washer system: Check spray jet settings, adjust if necessary ⇒ page 60

Note

When during a functional test it is determined that the wiper blades judder or make noises, check wiper blade setting angle *⇒ page 61* *.*

4.10.1 Checking Windscreen Clear with anti-freeze of windscreen wash/wipe system, replenishing with fluid if necessary

Checking anti-freeze concentration:

Special tools and workshop equipment required

Protected by copyright. Copyright by Volkswagen AG. Copyright by Volkswagen AG. Volkswagen AG does not guarantee or accept any liability with respect to the correctness of information in this document. Copyright by Volkswagen AG.
satelettronica

♦ Refractometer - T10007-

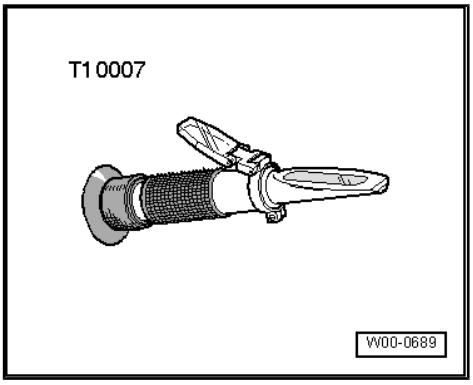

Read precise value for the following tests at light-dark border. Using a pipette, place a drop of water on the glass to improve the readability of the bright/dark boundary. The light-dark border can be clearly recognised on the “WATERLINE”.

– Check concentration of anti-freeze additive using refractometer - T10007- (refer to operating instructions).

The scale -1- of the refractometer - T10007- is calibrated for Genuine Volkswagen Windscreen Clear with anti-freeze - G 052 164- .

The scale -2- is designed for commercially available windscreen cleanser as well as a mixture of commercially available windscreen cleanser and genuine Volkswagen Windscreen Clear with anti-freeze - G 052 164- .

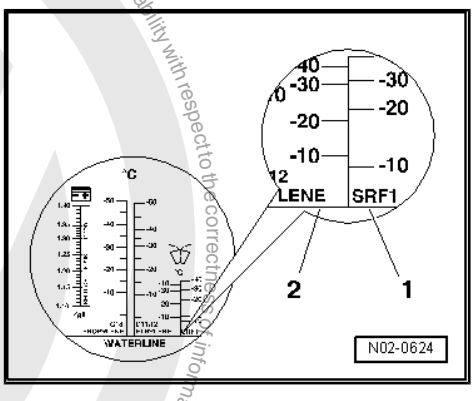

Mixing ratio

Frost protection to	Windscreen Clear G 052 164	Water
In summer	1 part	4 parts
-16°C	1 part	2 parts
-35°C	1 part	1 part
-40°C	2 parts	1 part

Replenishing with fluid

The fluid reservoir of the window washer system must be filled completely.

Starting immediately, use only Genuine Volkswagen Windscreen Clear with anti-freeze - G 052 164- all-year-round when replenishing window wash/wipe system.

Protected by copyright. Copying for private or commercial purposes, in part or in whole, is not permitted unless authorised by Volkswagen AG. Volkswagen AG does not guarantee or accept any liability with respect to the correctness of information in this document. Copyright by Volkswagen AG.
satelettronica

Note

- *For all vehicles having fan-type spray jets, the reservoir must be filled with Genuine Volkswagen Windscreen Clear with anti-freeze - G 052 164- , as this fluid has a low viscosity at temperatures below freezing. Otherwise the complicated spray jet system can become blocked by the crystallised washer fluid, which affects the spray pattern of the spray jet. Genuine Volkswagen Windscreen Clear with anti-freeze - G 052 164- ensures that the fan type spray jets remain fully functional at low temperatures.*
- *Genuine Volkswagen Windscreen Clear with anti-freeze - G 052 164- protects the spray jets, fluid reservoir and connecting hoses from freezing.*
- *Use Genuine Volkswagen Windscreen Clear with anti-freeze - G 052 164- in the warmer periods of the year also. The powerful cleanser removes wax and oil residue from the glass.*
- *Frost protection in the washer system must be guaranteed to approx. -25°C (approx. -35°C in countries with an arctic climate).*

4.10.2 Windscreen wash/wipe system: checking spray jet settings, adjusting if necessary

Windscreen without preset washer jets

Special tools and workshop equipment required

- Window washer jet adjusting tool - 3125 A-

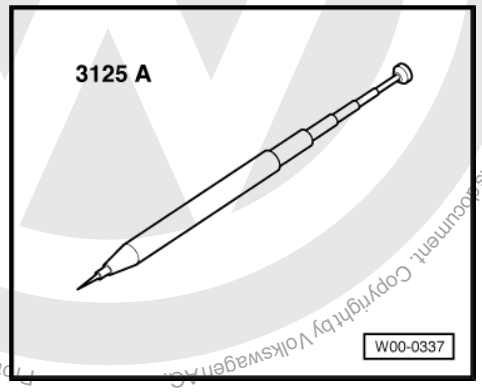

Note

- *The spray jets may be cleaned in both directions, also opposite to direction of spray with compressed air or water.*
- *If spray jet is irregular or cannot be adjusted to centre of wiped area, renew spray jet (repair measure).*
- *Never use a needle or similar object, as otherwise water passages in spray jets will be damaged!*

Protected by copyright. Copying for private or commercial purposes, in part or in whole, is not permitted unless authorised by Volkswagen AG. Volkswagen AG does not guarantee or accept any liability with respect to the correctness of information in this document. Copyright by Volkswagen AG.
satelettronica

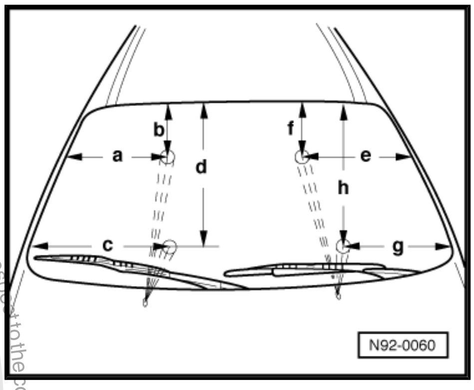

– Check spray jet setting, if necessary adjust spray jets using window washer jet adjustment tool - 3125 A- .

– Adjust the outer right spray jet to the following dimension:

a - 280 mm

b - 300 mm

– Adjust the inner right spray jet to the following dimension:

c - 430 mm

d - 560 mm

– Adjust the inner left spray jet to the following dimension:

e - 400 mm

f - 330 mm

– Adjust the outer left spray jet to the following dimension:

g - 330 mm

h - 560 mm

Tolerance for all spray jets: ± 20 mm

Windscreen with preset washer jets

The spray jets are preset. However, small differences in height may be corrected.

Note

The spray jets may be cleaned in both directions, also opposite to direction of spray with compressed air or water.

If both spray fields are not at same height, adjust spray direction upwards as follows:

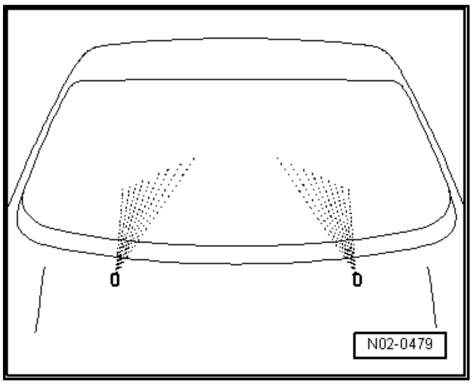

– Turn eccentric on spray jet in -direction of arrow- using a screwdriver.

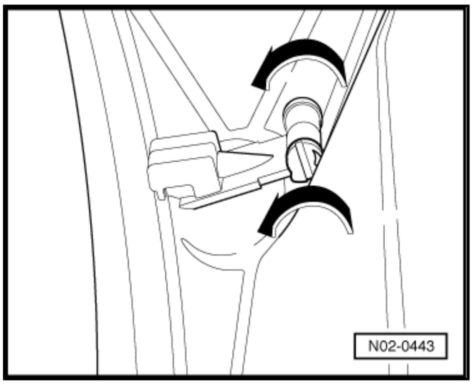

Rear window

Special tools and workshop equipment required

Protected by copyright. Copying for private or commercial purposes, in part or in whole, is not permitted unless authorised by Volkswagen AG. Volkswagen AG does not guarantee or accept any liability with respect to the correctness of information in this document. Copyright by Volkswagen AG.

satelettronica

- Window washer jet adjusting tool - 3125 A-

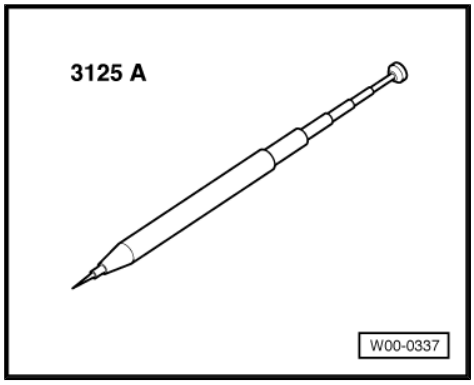

Note

- *If spray jet is irregular or cannot be adjusted to centre of wiped area, renew spray jet (repair measure).*
- *Never use a needle or similar object, as otherwise water passages in spray jets will be damaged!*

– Check jet setting.

Nozzle setting for rear window: spray jet aimed at centre of wiper field

– Adjust jet with window washer jet adjusting tool - 3125 A- if necessary.

4.10.3 Headlight washer system: checking spray jet settings, adjusting if necessary

Special tools and workshop equipment required

- Adjusting tool - 3019 A-

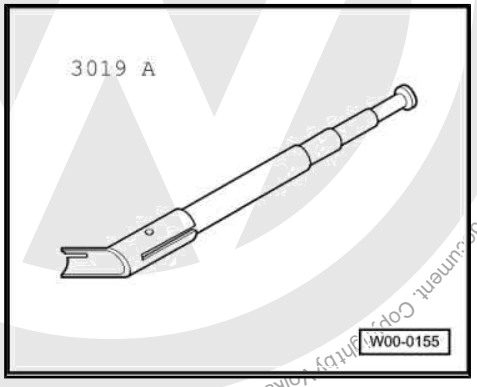

Carry out following procedure:

– Check jet settings, if necessary adjust with setting device - 3019 A- .

Note

If stream of water is uneven or cannot be adjusted to specified dimensions, renew washer jet (repair measure).

Protected by copyright. Copying for private or commercial purposes, in part or in whole, is not permitted unless authorised by Volkswagen AG. Volkswagen AG does not guarantee or accept any liability with respect to the correctness of information in this document. Copyright by Volkswagen AG.
satelettronica

Jet adjustment dimensions for the right-hand headlight (left-hand mirror image).

– Adjust the outer right spray jet to the following dimension:

a - 130 mm

b - 60 mm

– Adjust the inner right spray jet to the following dimension:

c - 65 mm

d - 125 mm

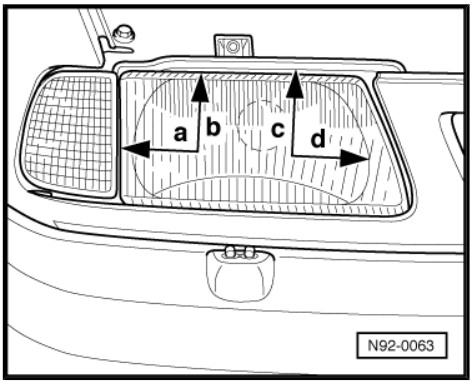

4.11 Windscreen wiper blades: checking park position, if wiper blades judder: checking setting angle

Windscreen wiper blades: check park position, adjust if necessary ⇒ page 61

Rear window wiper blades: check park position, adjust if necessary ⇒ page 62

Wiper blades: checking setting angle, adjust if necessary ⇒ page 63

4.11.1 Windscreen wiper blades: checking park position, adjusting if necessary

Special tools and workshop equipment required

♦ Torque wrench - V.A.G 1331-

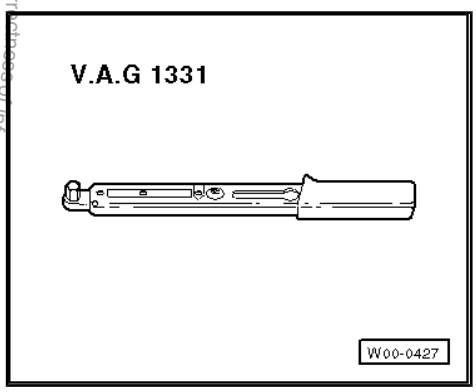

♦ Puller - T10130-

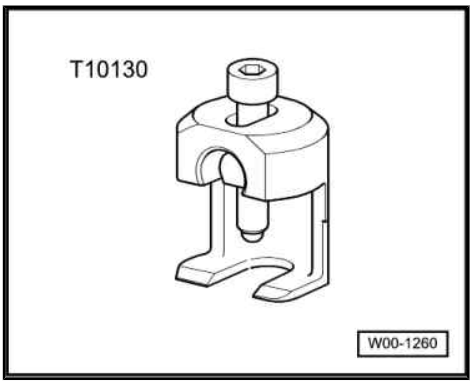

Vehicles ▸09.99

– Check park position.

Protected by copyright. Copying for private or commercial purposes, in part or in whole, is not permitted unless authorised by Volkswagen AG. Volkswagen AG does not guarantee or accept any liability with respect to the correctness of information in this document. Copyright by Volkswagen AG.
satelettronica

Protected by copyright. Copying for private or commercial purposes, in part or in whole, is not permitted unless authorised by Volkswagen AG. Volkswagen AG does not guarantee or accept any liability with respect to the correctness of information in this document. Copyright by Volkswagen AG.

– Check if wiper blades are in park position on markings in the windscreen.

a - Markings for left-hand drive vehicles

b - Markings for right-hand drive vehicles

– Adjust park position by moving wiper arm if necessary.

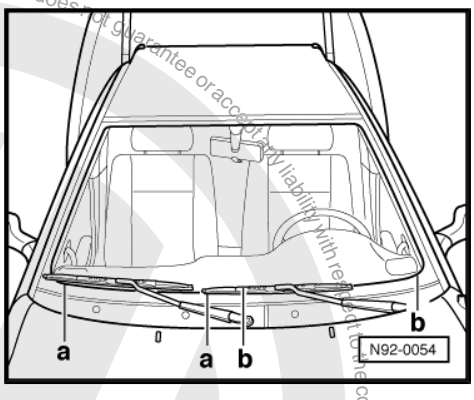

Wiper arm torque setting: 20 Nm

Vehicles 10.99►

Note

On RHD vehicles, the wiper blades are a mirror image of those on LHD vehicles.

– Deactivate APP function.

– Allow wiper to move to park position and then switch ignition off.

– Now adjust the windscreen wiper park position.

Driver side:

The distance -A- between wiper blade and upper side of plenum chamber cover must be 30 mm.

– Adjust windscreen wiper park position by moving the wiper arm if necessary.

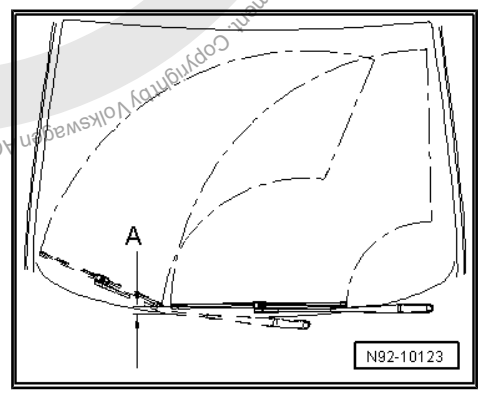

Remove wiper arms »Vehicle electrics« ⇒ Vehicle electrics; Rep. gr. 92 ; Removing and installing windscreen wiper system »Removing and installing windscreen wiper system«

– Tighten threaded connections to prescribed torque settings »Vehicle electrics« ⇒ Vehicle electrics; Rep. gr. 92 ; Assembly overview - windscreen wiper system »Assembly overview - windscreen wiper system«

Front passenger side:

The distance -B- between wiper blade and upper side of plenum chamber cover must be 30 mm.

– Adjust windscreen wiper park position by moving the wiper arm if necessary.

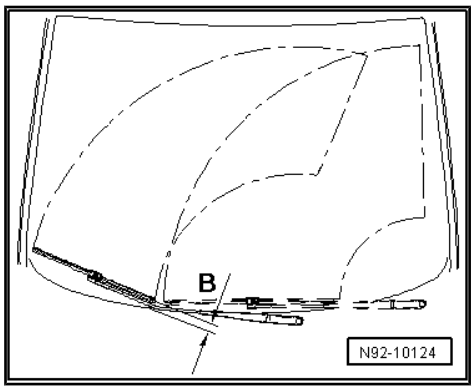

Remove wiper arms »Vehicle electrics« ⇒ Vehicle electrics; Rep. gr. 92 ; Removing and installing windscreen wiper system »Removing and installing windscreen wiper system«

– Tighten threaded connections to prescribed torque settings »Vehicle electrics« ⇒ Vehicle electrics; Rep. gr. 92 ; Assembly overview - windscreen wiper system »Assembly overview - windscreen wiper system«

4.11.2 Rear window wiper blades: checking park position, adjusting if necessary

Caddy

– Check park position.

satelettronica

Protected by copyright. Copyright by Volkswagen AG. Volkswagen AG does not guarantee or accept any liability with respect to the correctness of information in this document. Copyright by Volkswagen AG. Commercial purposes, in part or in whole, is not permitted unless authorised by Volkswagen AG.

The distance -a- between wiper blade and lower edge of window must be 15 mm (measured from glass lower edge).

– Adjust park position by moving wiper arm if necessary. Specified torque for wiper arm: 15 Nm

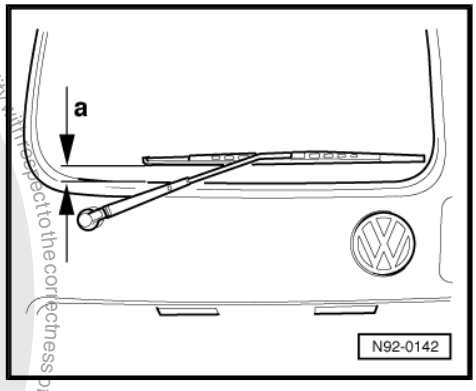

Polo Estate

– Check park position.

The distance -a- between wiper blade and lower edge of window must be 20 to 30 mm (measured from glass lower edge).

– Adjust park position by moving wiper arm if necessary. Specified torque for wiper arm: 15 Nm

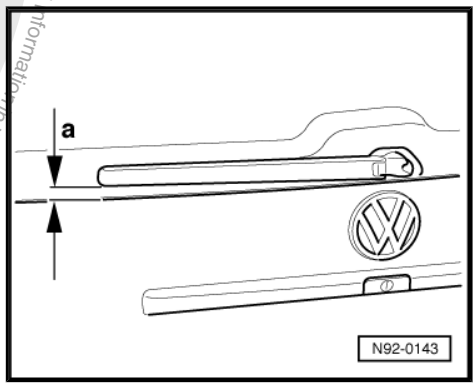

4.11.3 Wiper blades: checking setting angle, adjusting if necessary

Note

Check setting angle only if wiper blades judder or make noises.

Special tools and workshop equipment required

♦ Wiper setting device - 3358 B-

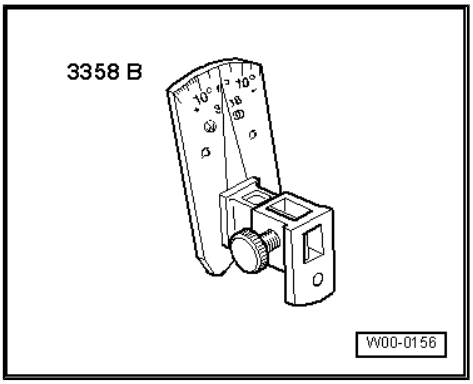

Carry out following procedure:

– Set wiper arms to rest position.

– Remove wiper blade.

satelettronica

– Insert wiper arm -2- into wiper arm setting device - 3358 B- and secure with locking screw -3-.
– Check setting angle.

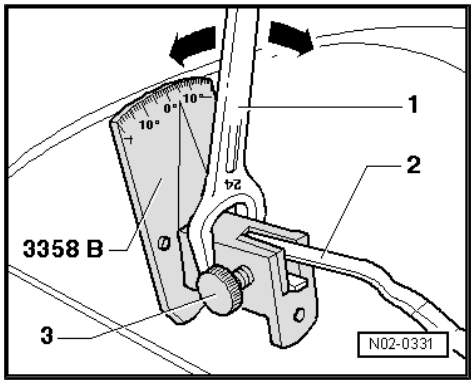

Contact angle (specifications) for		
	LHD vehicles	RHD vehicles
Driver side	-7°	+7°
Front passenger side	-6°	+6°
Rear wiper, Polo estate	Plastic wiper arm. Adjustment is not possible.	
Tolerance	±2°	±2°

Adjust setting angle to specification, if required, as follows:
– Fit 24 mm open jaw spanner -1- on setting device and adjust wiper arm -2- to specification -arrows-.
– Release wiper arm -2- from setting device and then resecure with locking screw -3-.
– Check setting against table. Repeat adjustment and check sequence until specifications are achieved.
– Remove setting device and fit wiper blade.
– Check if wiper system operates without juddering.

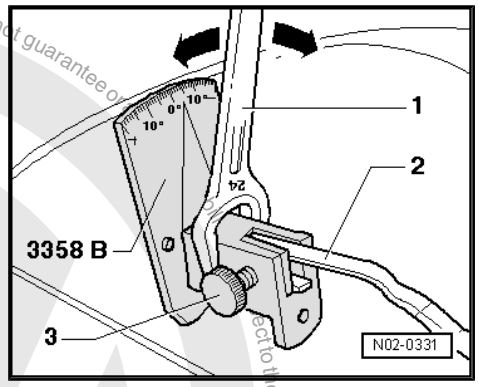

4.12 Wheel securing bolts: tightening to specified torque

Special tools and workshop equipment required

♦ Torque wrench - V.A.G 1332/- (40-200 Nm)

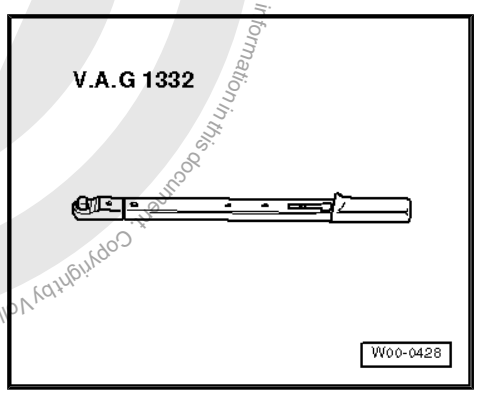

and if necessary, if anti-theft wheel bolts are installed:

Protected by copyright. Copying for private or commercial purposes, in part or in whole, is not permitted unless authorised by Volkswagen AG. Volkswagen AG does not guarantee or assume any liability with respect to the correctness of information in this document. Copyright by Volkswagen AG.

satelettronica

♦ Adapter set for tamper-proof wheel bolts - T10101-

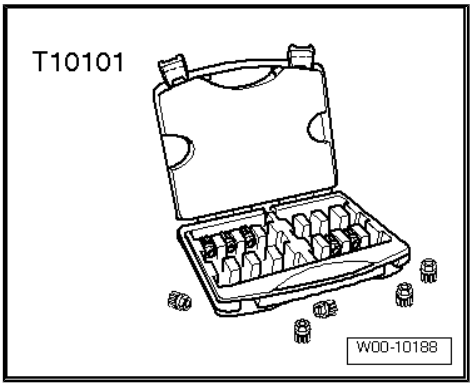

Remove cover cap

The puller hooks to remove the cover caps are located with the vehicle tool kit.

Wheel bolts

The adapter to loosen and tighten the anti-theft wheel bolts is found in the vehicle tool kit or use the adapter set for wheel bolts - T10101- .

Note

Ensure that wheel bolts are tightened diagonally and alternately to the following torque setting:

Specified torque: 120 Nm

WARNING

Whenever wheels are mounted, wheel bolts or nuts must be tightened a second time.

Wheel bolts or nuts must be retightened after approx. 50 km.

Note

At "Delivery inspection" do not hang a label on the interior rear view mirror, because the wheels have already been tightened to prescribed torque at the factory. The wheels must only be retightened at "Delivery inspection" to the prescribed torque.

– Whenever wheels are mounted, hang the label on interior rear view mirror in a visible position.

– Place puller hooks and adapter with vehicle tool kit after completing work.

Installing full sized wheel trim

Protected by copyright. Copying for private or commercial purposes, in part or in whole, is not permitted unless authorised by Volkswagen AG. Volkswagen AG does not guarantee or accept any liability with respect to the correctness of information in this document.
satelettronica

– Install full sized wheel trim so that the tyre filler valve is guided through the cut-out provided -arrow-.

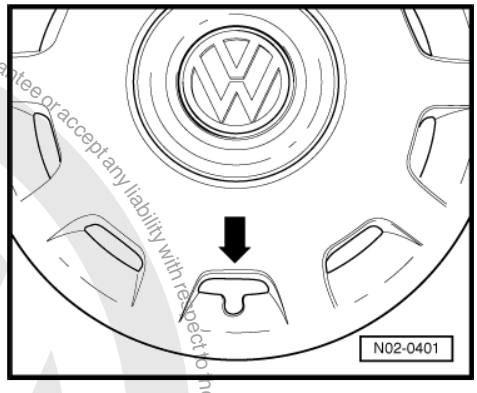

4.13 Tyres: checking condition, wear pattern, inflation pressure, tread depth

Note

- *The following work descriptions also apply to the spare wheel, if a spare wheel with standard tyres is fitted.*
- *For safety reasons, only tyres of same type and tread pattern should be fitted on a vehicle!*

Check condition ⇒ page 66

Checking wear pattern ⇒ page 67

Tyre tread depth (including spare wheel): Check and enter ⇒ page 67

Tyre pressures (including spare wheel): Check, correct if necessary ⇒ page 67

4.13.1 Checking condition

Tests at delivery inspection

– Check tyre areas for damage as follows:
- »Tyre tread«
- »Tyre side wall«

– Remove foreign bodies from tyres such as nails and glass splinters if necessary.

Note

If damage is determined, always check to see if a new tyre should be fitted.

Checks during inspection service

– Check tyre areas for damage as follows:
- »Tyre tread«
- »Tyre side wall«

– Remove foreign bodies from tyres such as nails and glass splinters if necessary.

– Check tyres additionally for:
- »Cupping«

Volkswagen AG, Volkswagen AG does not guarantee or accept any liability with respect to the correctness of information in this document. Copyright by Volkswagen AG. Reproduced by copyright owners only for private or commercial purposes, in part or in whole, is not permitted unless authorised.
satelettronica

- »One-sided tread wear«
- »Porous side walls«
- »Cuts«
- »Punctures«

Note

The customer must be informed of any faults found.

4.13.2 Wear pattern: checking

The wear pattern on the front tyres will indicate, for example, if toe and camber settings should be checked:

- Feathering on tread indicates incorrect toe setting.
- One-sided tread wear is mainly attributed to incorrect camber.

When wear of this nature is detected, determine cause by checking alignment (repair measure).

4.13.3 Tyre tread depth (including spare wheel): checking and entering

– Check tyre tread depth.

Minimum tread depth: 1.6 mm

Note

- *This figure may vary according to legislation in individual countries.*
- *The minimum tread depth is reached when the tyres have worn down level with the 1.6 mm high tread wear indicators -arrows- positioned at intervals around the tyre.*
- *If the tread depth is approaching the minimum allowed depth, inform the customer.*

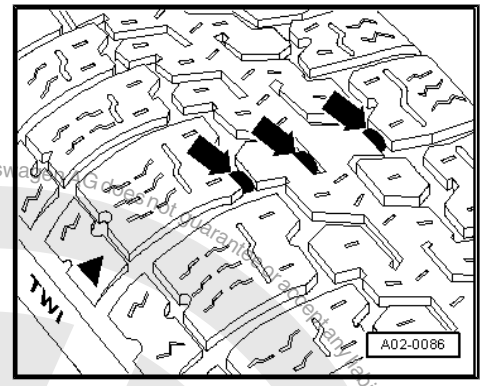

4.13.4 Tyre pressures (including spare wheel): checking, correcting if necessary

Special tools and workshop equipment required

- Tyre inflator - VAS 5216-

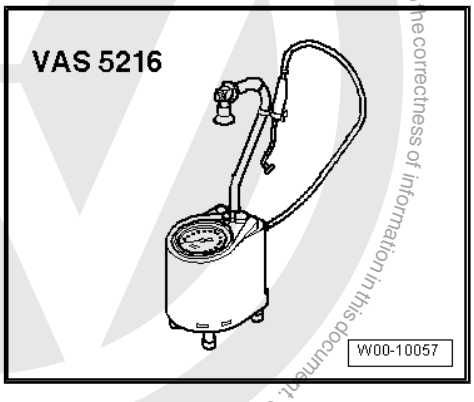

satelettronica
Protected by copyright. Copying for private or commercial purposes, in part or in whole is not permitted unless authorised by Volkswagen AG. Volkswagen AG does not guarantee or assume any liability with respect to the correctness of information in this document. Copyright by Volkswagen AG.

Note

- *"Checking tyre pressure" also applies to the spare wheel, if a spare wheel with standard tyres is fitted.*
- *The pressures in the table apply to cold tyres. Do not reduce increased pressures of warm tyres.*
- *Winter tyres and summer tyres may be used with the same tyre sizes.*
- *The tyre pressure for winter tyres must be 0.2 bar higher than the tyre pressure for standard tyres, but should not exceed 3.5 bar.*
- *Important information about brands of tyre recommended by us can be found in "Volkswagen Commercial Vehicles ServiceNet/Accessories/Tyres/Wheels and Tyres/Wheels and Tyres Guide for Commercial Vehicles/Wheels and Tyres Catalogue".*
- *Tyre pressures for summer tyres for the relevant model can also be found on a sticker attached to the inside of fuel tank flap.*
- *Values for pressure are given in "bar".*
- *Adjust the tyre pressure to suit the vehicle load. When doing this, commercial vehicles predominantly drive with a tyre pressure at full load.*
- *On vehicles with steel wheels and wheel trim check tyre pressure valve extensions for damage and soiling, otherwise leaks could occur. If necessary, renew extensions.*

Tyre pressure table for standard tyres

(for all factory fitted tyre sizes)

Caddy

Tyre pressures in bar

Vehicles with petrol engine				
	Half load		Full load	
	Front	Rear	Front	Rear
40 kW/44 kW with tyres				
175/65 R 14	2.0	2.4	2.1	3.4
185/60 R 14	2.2	2.4	2.3	3.4
55 kW with tyres				
175/65 R 14	2.2	2.4	2.3	3.4
185/60 R 14	2.2	2.4	2.3	3.4
Spare wheel:	Keep to the highest pressure required for the vehicle.			

Vehicles with diesel engine				
	Half load		Full load	
	Front	Rear	Front	Rear
42 kW (not postal vehicles) with tyres				

Protected by copyright. Copyright by Volkswagen AG.
Copyright by Volkswagen AG. Volkswagen AG does not guarantee or accept any liability with respect to the correctness of information in this document.
Copyright by Volkswagen AG. Volkswagen AG does not guarantee or accept any liability with respect to the correctness of information in this document. Copying for private or commercial purposes, in part or in whole, is not permitted unless authorised by Volkswagen AG.
satelettronica

Protected by copyright. Copying for private or commercial purposes, in part or in whole, is not permitted unless authorised by Volkswagen AG. Copyright by Volkswagen AG. Volkswagen AG does not guarantee or accept any liability with respect to the correctness of information in this document.

Vehicles with diesel engine				
175/65 R 14 185/60 R 14	2.2 2.2	2.4 2.4	2.3 2.3	3.4 3.4
47 kW (not postal vehicles) with tyres 175/65 R 14 185/60 R 14	 2.2 2.2	 2.4 2.4	 2.3 2.3	 3.4 3.4
66 kW (not postal vehicles) with tyres 175/65 R 14 185/60 R 14	 2.2 2.2	 2.4 2.4	 2.3 2.3	 3.4 3.4
Spare wheel:	Keep to the highest pressure required for the vehicle.			

Polo Classic

Tyre pressures in bar

Vehicles with petrol engine				
	Half load		Full load	
	Front	Rear	Front	Rear
40 kW/44 kW with tyres 185/60 R 14 185/55 R 15	 2.0 2.1	 2.0 1.9	 2.2 2.2	 2.6 2.5
55 kW with tyres 185/60 R 14 185/55 R 15	 2.2 2.1	 2.2 1.9	 2.4 2.2	 2.6 2.5
66 kW with tyres 185/55 R 15	 2.1	 1.9	 2.2	 2.5
74 kW with tyres 185/55 R 15	 2.2	 2.1	 2.4	 2.6
Spare wheel (all engine types)				
Temp. spare standard wheel	4.2 Keep to the highest pressure required for the vehicle.			

Vehicles with diesel engine				
	Half load		Full load	
	Front	Rear	Front	Rear
42 kW/44 kW with tyres 185/60 R 14	 2.1	 2.0	 2.3	 2.6
47 kW with tyres 185/60 R 14 185/55 R 15	 2.1 2.1	 2.0 1.9	 2.3 2.2	 2.6 2.5

satelettronica

Vehicles with diesel engine				
50 kW with tyres 185/55 R 15	2.1	1.9	2.2	2.5
66 kW with tyres 185/60 R 14 185/55 R15	2.3 2.3	2.2 2.1	2.4 2.4	2.6 2.6
81 kW with tyres 185/60 R 14 185/55 R 15	2.3 2.4	2.2 2.2	2.4 2.5	2.6 2.7
Spare wheel (all engine types)				
Temp. spare standard wheel	4.2 Keep to the highest pressure required for the vehicle.			

Polo Estate

Tyre pressures in bar

Vehicles with petrol engine				
	Half load		Full load	
	Front	Rear	Front	Rear
40 kW/44 kW with tyres 185/60 R 14 185/55 R 15	2.1 2.1	2.0 2.0	2.2 2.2	2.6 2.6
55 kW with tyres 185/60 R 14 185/55 R 15	2.1 2.1	2.0 2.0	2.2 2.2	2.6 2.6
66 kW with tyres 185/55 R 15	2.1	2.0	2.3	2.6
74 kW with tyres 185/60 R 14 185/55 R 15	2.2 2.2	2.2 2.3	2.3 2.2	2.7 2.7
Spare wheel (all engine types)				
Temp. spare standard wheel	4.2 Keep to the highest pressure required for the vehicle.			

Vehicles with diesel engine				
	Half load		Full load	
	Front	Rear	Front	Rear
42 kW/44 kW with tyres 185/60 R 14	2.1	2.1	2.2	2.6
47 kW with tyres 185/60 R 14 185/55 R 15	2.1 2.1	2.0 2.0	2.2 2.2	2.6 2.6

Protected by copyright. Copying for any purpose or commercial use is not permitted unless authorised by Volkswagen AG. Volkswagen AG does not guarantee or accept any liability with respect to the correctness of information in this document. Copyright by Volkswagen AG.

satelettronica

Vehicles with diesel engine				
50 kW with tyres 185/55 R 15	2.1	2.0	2.2	2.6
66 kW with tyres 185/60 R 14 185/55 R 15	 2.3 2.3	 2.2 2.2	 2.4 2.4	 2.7 2.7
81 kW with tyres 185/60 R 14 185/55 R 15	 2.3 2.3	 2.2 2.2	 2.4 2.4	 2.7 2.7
Spare wheel (all engine types)				
Temp. spare standard wheel	4.2 Keep to the highest pressure required for the vehicle.			

4.14 Engine oil level: checking

Please note the following:

After shutting off engine, wait at least 3 minutes so that the oil can flow back into the sump.

– Pull out dipstick, wipe with a clean cloth and push dipstick in again to limit stop.

Note

Please observe disposal instructions!

– Pull dipstick out again and read oil level.

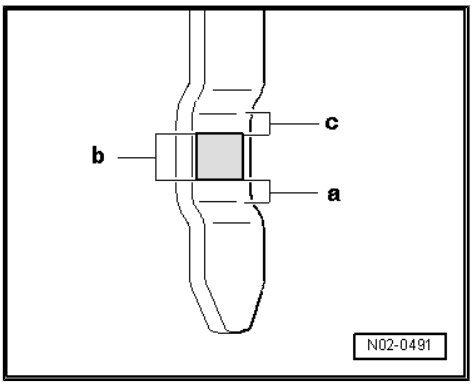

Area a	Oil must be replenished. After replenishing it is sufficient when the oil level is somewhere in area -b-.
Area b	Oil does not have to be replenished.
Area c	Do not top up oil.

Note

A danger exists of damaging the catalytic converter when oil level is above area -c-.

Protected by copyright. Copying for private or commercial purposes, in part or in whole, is not permitted unless authorised by Volkswagen AG. Volkswagen AG does not guarantee or accept any liability with respect to the correctness of information in this document. Copyright by Volkswagen AG.
satelettronica

– When oil level is below min. marking, replenish with oil to max. marking. Oil specifications ⇒ page 6

4.15 Engine oil: Draining or extracting and replenishing; renewing oil filter

Special tools and workshop equipment required

♦ Oil extractor - V.A.G 1307 A-

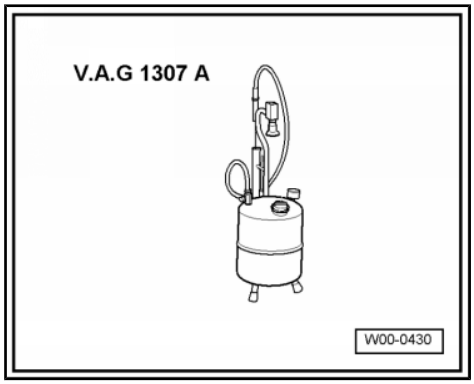

or

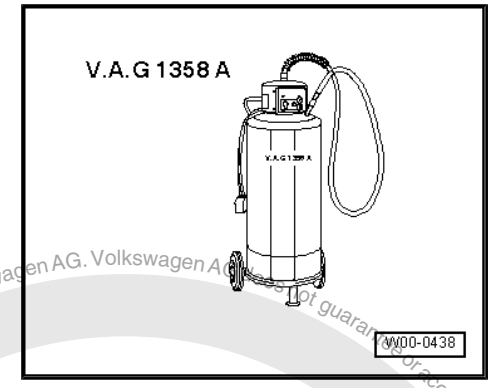

satelettronica
Protected by copyright. Copying for private or commercial purposes, in part or in whole, is not permitted unless authorised by Volkswagen AG. Volkswagen AG does not guarantee or accept any liability with respect to the correctness of information in this document. Copyright by Volkswagen AG.

- Used oil collection and extraction unit - V.A.G 1358 A-
- Torque wrench - V.A.G 1331-

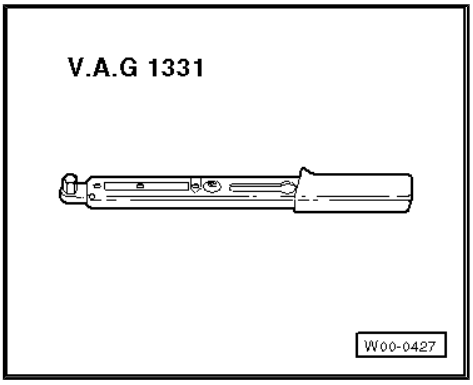

Note

- *If the engine oil is drained and not extracted with an oil extractor, replace drain plug seal. This prevents leaks.*
- *Please observe disposal instructions!*
- *Oil capacities see »Engine mechanics« ⇒ Engine mechanics; Rep. gr. 17 ; Removing and installing parts of lubrication system »Removing and installing parts of lubrication system«*

TDI engines: After changing engine oil and oil filter, check following after first engine start:

– The engine must only run at idling speed as long as the oil pressure warning lamp lights up in dash panel. Do not rev up! If the engine is revved up the turbocharger can be damaged or fail completely.

– The full oil pressure is not attained until the warning lamp has gone out, only then can the engine be revved up.

Note

Remember that the following torque details must not be exceeded. Excessive torque can cause leaks in the area of the oil drain plug or even damage.

Oil drain plug torque setting: 30 Nm

Because of the positive oil properties, use only the following approved engine oils:

- Oil specification for petrol and diesel engines ⇒ page 6

– After replenishing with oil, wait at least 3 minutes and then check oil level.

– Pull out dipstick, wipe with a clean cloth and push dipstick in again to limit stop.

Note

Please observe disposal instructions!

– Pull out dipstick and read off oil level:

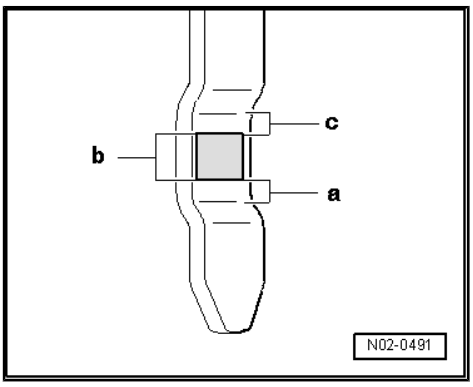

Area a	Oil must be replenished. After replenishing it is sufficient when the oil level is somewhere in area -b-.

Protected by copyright. Copying for private or commercial purposes, in part or in whole, is not permitted unless authorised by Volkswagen AG. Volkswagen AG does not guarantee or accept any liability with respect to the correctness of information in this document. Copyright by Volkswagen AG.
satelettronica

Area b	Oil does not have to be replenished.
Area c	Do not top up oil.

Note

A danger exists of damaging the catalytic converter when oil level is above area -c-.

4.15.1 Oil filter: renewing

Special tools and workshop equipment required

- Oil filter tool - 3417-

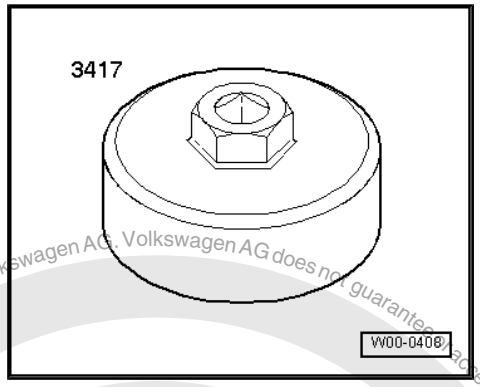

- Torque wrench - V.A.G 1331-

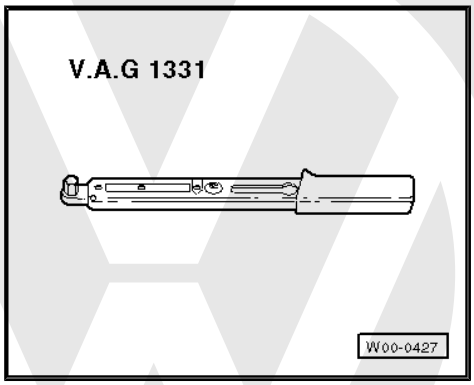

- Oil filter tool (commercially available)

or

- Oil filter strap wrench

Engine codes ADZ, AEY, AFN, AFT, AHB, AHU, AKW, ALE, 1F and 1Y

Carry out following procedure:

Protected by copyright. Copying for private or commercial purposes, in part or in whole, is not permitted unless authorised by Volkswagen AG. Volkswagen AG does not guarantee or accept any liability with respect to the correctness of information in this document. Copyright by Volkswagen AG.
satelettronica

– Loosen oil filter -arrow- from below with oil filter tool and remove oil filter.

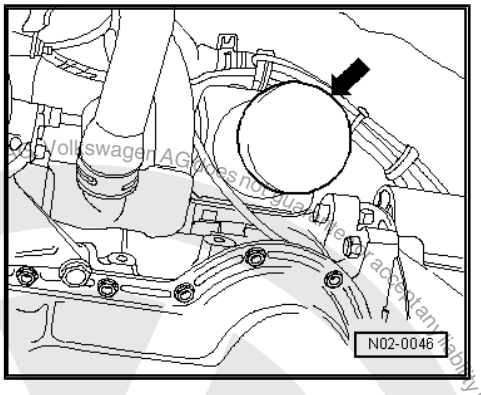

Note

Please observe disposal instructions!

– Clean engine sealing surface.
– Oil rubber seal lightly on new filter. Thus the oil filter can adhere better when tightening, which assures best possible sealing.
– Screw in filter and tighten hand-tight.

Engine codes AEE, AEX, AKV, ALM, ANX and APQ

Carry out following procedure:

– Loosen oil filter -arrow- from below with strap wrench and remove oil filter.

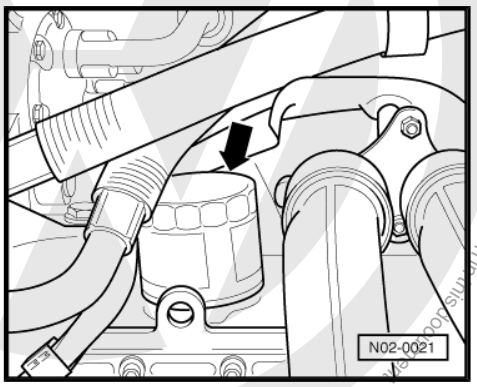

Note

Please observe disposal instructions!

– Clean engine sealing surface.
– Oil rubber seal lightly on new filter. Thus the oil filter can adhere better when tightening, which assures best possible sealing.
– Screw in filter and tighten hand-tight.

Engine codes AEH, AKL, APF and AUR

Carry out following procedure:

– Loosen oil filter -arrow- from below with strap wrench and remove oil filter.

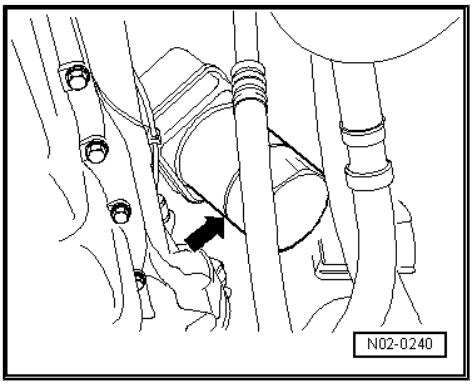

Note

Please observe disposal instructions!

– Clean engine sealing surface.
– Oil rubber seal lightly on new filter. Thus the oil filter can adhere better when tightening, which assures best possible sealing.
– Screw in filter and tighten hand-tight.

Engine codes AGP, AGR, ALH, AQM, ASK, ASV and AYQ

Carry out following procedure:

Protected by copyright. Copying for private or commercial purposes, in part or in whole, is not permitted unless authorised by Volkswagen AG. Volkswagen AG does not guarantee or accept any liability with respect to the correctness of information in this document. Copyright by Volkswagen AG.
satelettronica

– Release sealing cap -1- with oil filter key - 3417- .

– Renew O rings -2- and -3- as well as oil filter element -4-.

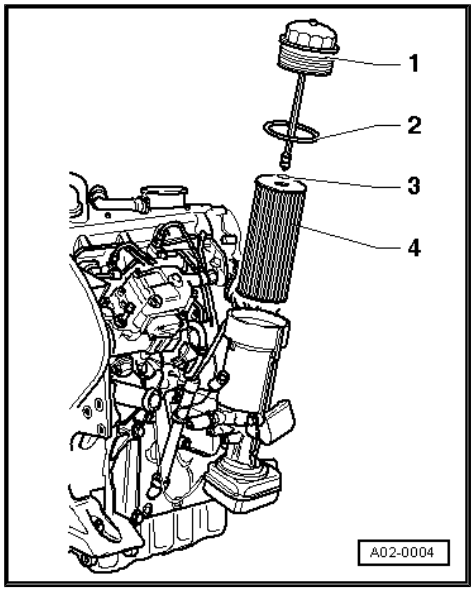

Note

Please observe disposal instructions!

– Tighten sealing cap -1- with oil filter key - 3417- .

Cover cap torque setting: 25 Nm

Engine codes AKK, ANW, APE, AQQ, AUA and AUD

Carry out following procedure:

– Loosen oil filter -arrow- from below with a 30 mm open jaw spanner and remove oil filter.

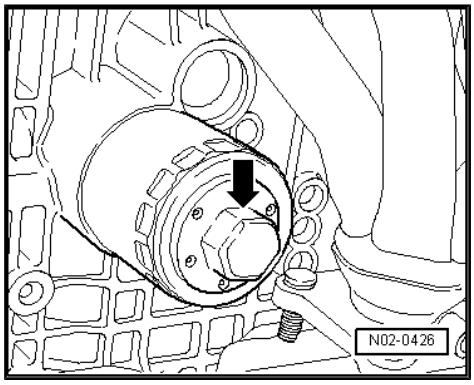

Note

Please observe disposal instructions!

– Clean engine sealing surface.

– Oil rubber seal lightly on new filter. Thus the oil filter can adhere better when tightening, which assures best possible sealing.

– Screw in filter and tighten hand-tight.

4.16 Engine and components in engine compartment: inspecting for leaks and damage (from above and below)

Inspect as follows:

– Check engine and components in engine compartment for leaks and damage.

– Check lines, hoses and connections of

♦ Fuel system

♦ Cooling and heating system

♦ And brake system

For leaks, abrasions, porosity and brittleness.

Note

♦ *Arrange for defects to be rectified as repair measures.*

♦ *If fluid loss is greater than can be expected through normal use, determine source and rectify (repair measure).*

Protected by copyright. Copying for private or commercial purposes, in part or in whole, is not permitted unless authorised by Volkswagen AG. Volkswagen AG does not guarantee or accept any liability with respect to the correctness of information in this document. Copyright by Volkswagen AG.
satelettronica

4.17 V-belt: checking condition and tensioning

Special tools and workshop equipment required

- Torque wrench - V.A.G 1410-

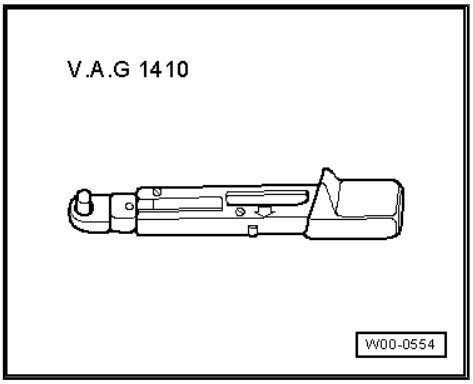

- Ring spanner insert - V.A.G 1410/2-

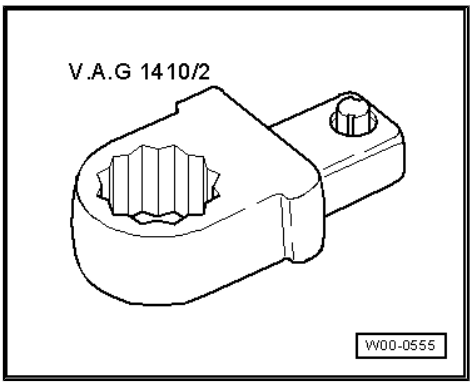

Copyright by Volkswagen AG. Volkswagen AG does not guarantee or accept any liability with respect to the correctness of information in this document. Copyright by Volkswagen AG. Protected by copyright. Copying for private or commercial purposes, in part or in whole, is not permitted unless authorised by Volkswagen AG.

4.17.1 Checking V-belt condition

– Check V-belt condition for:

- Sub-surface cracks (cracks, core ruptures, cross sectional breaks)
- Layer separation (top layer, cord strands)
- Base break-up
- Frayed cord strands
- Flank wear (material wear, frayed flanks, flank brittleness - glassy flanks-, surface cracks)
- Traces of oil and grease

Note

If faults are found, it is absolutely necessary to renew the V-belt. This can avoid breakdowns and malfunctions. The replacement of a V-belt is a repair measure.

4.17.2 Checking V-belt tension, tensioning V belt if necessary

Carry out following procedure:

– Check V-belt tension by strong thumb pressure (deflection approx. 5 mm) and adjust if necessary.

satelettronica

– Loosen securing bolts -1- and -2-, clamping bolt -3- and securing nut -4- for tensioning arm at least 1 turn.
– Tension V-belt to 4 Nm (used belt) or 7 Nm (new belt) by turning tensioning nut using torque wrench -A- and tighten tensioning nut clamping bolt -3- to 25 Nm.
– Tighten vane pump securing bolt -1- to 45 Nm.
– Tighten vane pump securing bolt -2- and tensioning arm securing nut -4- to 25 Nm.

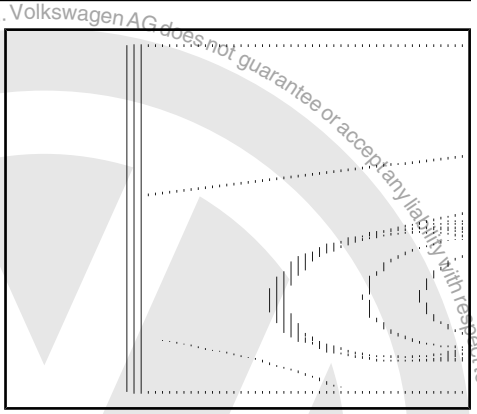

4.18 Poly V-belt: checking condition and tensioning belt

Carry out following procedure:

– Crank engine at vibration damper/belt pulley -arrow- using a socket.
– Raise vehicle and check poly V-belt -1- from below for:

- Sub-surface cracks (cracks, core ruptures, cross sectional breaks)
- Layer separation (top layer, cord strands)
- Base break-up
- Frayed cord strands
- Flank wear (material wear, frayed flanks, flank brittleness - glassy flanks-, surface cracks)
- Traces of oil and grease

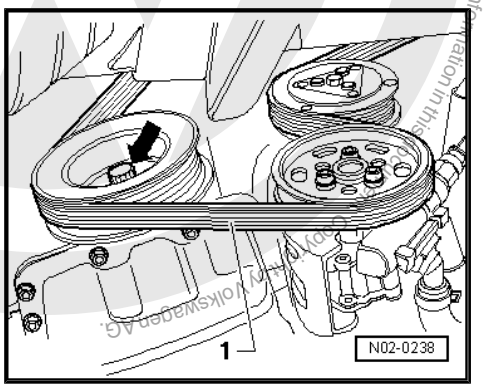

Note

If faults are found, it is essential for the poly V-belt to be renewed. This can avoid breakdowns and malfunctions. The replacement of a poly V-belt is a repair measure.

4.18.1 Tensioning belt (engines without automatic tensioning roller)

Special tools and workshop equipment required

- Torque wrench - V.A.G 1331-

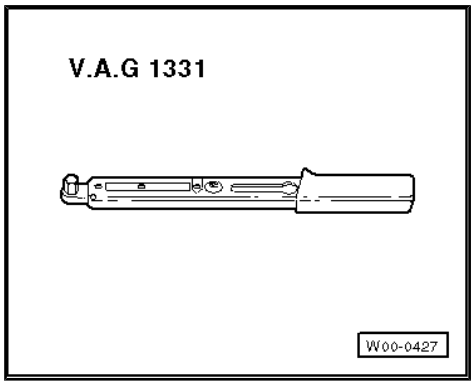

Protected by copyright. Copying for private or commercial purposes, in part or in whole, is not permitted unless authorised by Volkswagen AG. Volkswagen AG does not guarantee or accept any liability with respect to the correctness of information in this copy. © Copyright by Volkswagen AG.
satelettronica

Volkswagen AG. Volkswagen AG does not guarantee or accept any liability with respect to the correctness of information in this document. Copyright by Volkswagen AG. Copyright. Copying for private or commercial purposes, in part or in whole, is not permitted unless authorised by Volkswagen AG.

♦ Tensioning arm - 3297-

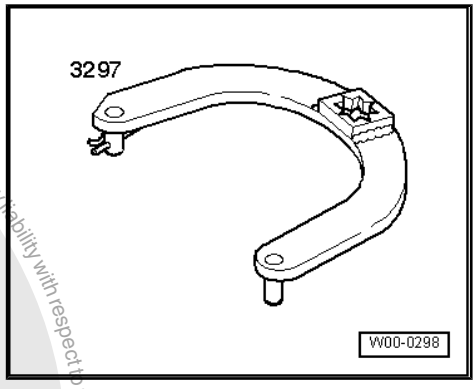

Carry out following procedure:

– Unbolt alternator securing bolts -1- and -2- at least one turn.

Vehicles with vane pump V-belt

– Remove V-belt for power assisted steering vane pump:»Running gear« ⇒ Running gear; Rep. gr. 48 ; Vane pump, reservoir, hydraulic lines »Vane pump, reservoir, hydraulic lines«

Continued for all vehicles

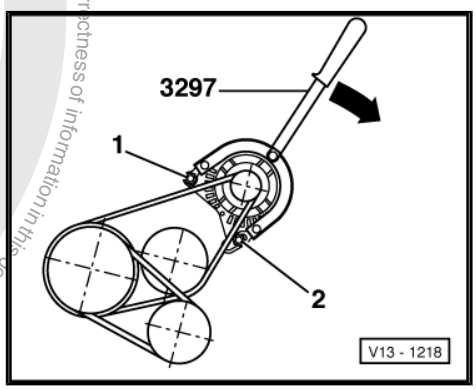

– Insert tensioning lever - 3297- , secure with pin -arrow- and swing alternator downwards (use e.g. torque wrench - 3297- as drive for tensioning lever - V.A.G 1331-).

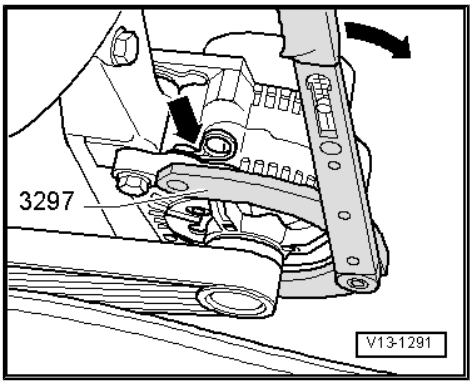

– Press alternator with tensioning lever - 3297- at least 3 times downwards onto stop, to ensure ease of movement.

– Rotate engine several times (approx. 10 engine revolutions) after fitting poly V-belt and with alternator loose, to do this operate starter briefly.

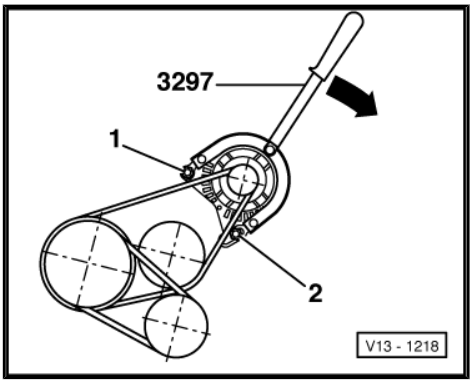

Note

When tightening adhere to prescribed sequence, do not lean on alternator and do not touch the poly V-belt.

satelettronica

– Tighten securing bolt -2- to 25 Nm.

– Tighten securing bolt -1- to 25 Nm.

Vehicles with vane pump V-belt

– Install V-belt for power assisted steering vane pump: »Running gear« ⇒ Running gear; Rep. gr. 48 ; Vane pump, reservoir, hydraulic lines »Vane pump, reservoir, hydraulic lines«

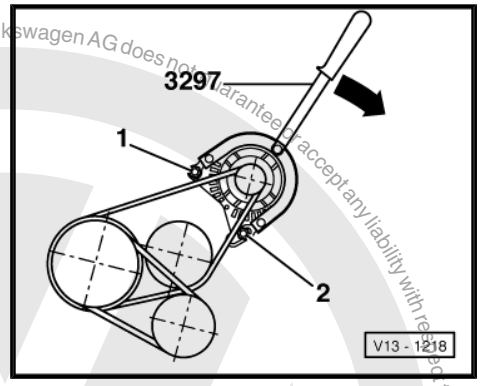

4.19 Boots: inspecting

Carry out following procedure:

– Check outer joint bellows -arrow- and inner joint bellows (not shown in illustration) for leaks and damage.

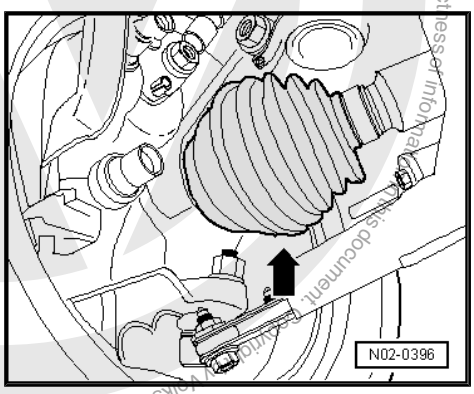

4.20 Manual gearbox/final drive: checking oil level

Special tools and workshop equipment required

♦ Torque wrench - V.A.G 1331-

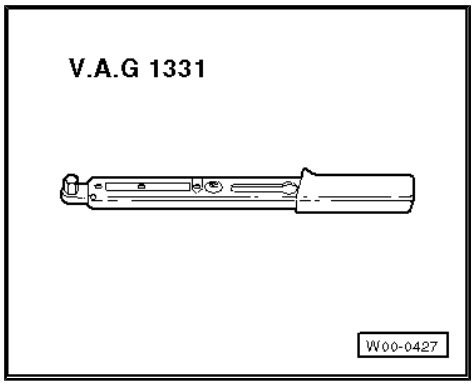

4.20.1 4 and 5-speed manual gearbox 020

Carry out following procedure:

– Turn steering wheel left onto stop.

Protected by copyright. Copying for private or commercial purposes, in part or in whole, is not permitted unless authorised by Volkswagen AG. Volkswagen AG does not guarantee or accept any liability with respect to the correctness of information in this document. Copyright by Volkswagen AG.
satelettronica

Protected by copyright. Copying for commercial purposes, in part or in whole, is not permitted unless authorised by Volkswagen AG. Volkswagen AG does not guarantee or accept any liability with respect to the correctness of information in this document. Copyright by Volkswagen AG.

– Remove oil filler plug -arrow-.
– Checking oil level: The oil level must be to lower edge of filler plug drilling.
– If necessary top up gearbox oil “Specification G 50 SAE 75W90 (synthetic oil)” to lower edge of filler plug drilling.
– Fit oil filler plug -arrow- and tighten to 25 Nm.

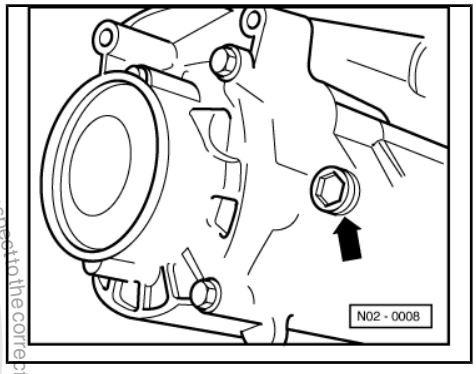

4.20.2 5-speed manual gearbox 085 up to build date 22.10.95

5-speed manual gearbox 085 from build date 23.10.95
⇒ page 81

The build date is stamped onto the gearbox, (Example: DCT25105 means gearbox with code letter DCT manufactured on 25.10.95).

Carry out following procedure:

– Turn steering wheel left onto stop.

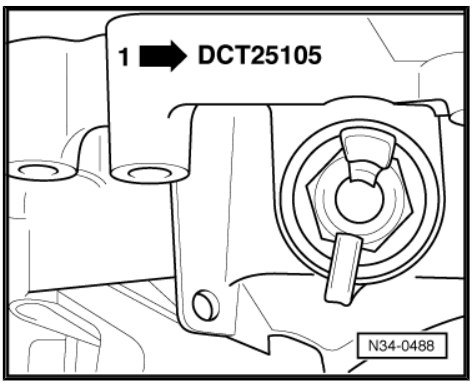

– Remove oil filler plug -arrow-.
– Checking oil level: The oil level must be to lower edge of filler plug drilling.
– If necessary top up gearbox oil “Specification G 50 SAE 75W90 (synthetic oil)” to lower edge of filler plug drilling.
– Fit oil filler plug -arrow- and tighten to 25 Nm.

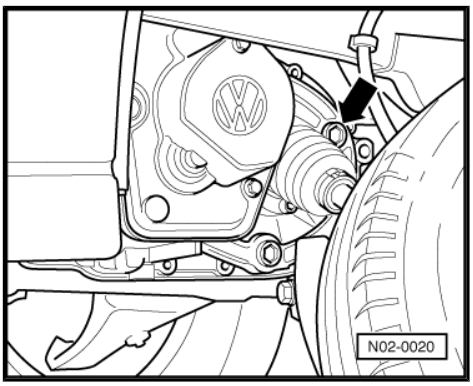

4.20.3 5-speed manual gearbox 085 from build date 23.10.95

– Remove oil filler plug -arrow-.
– Checking oil level: The oil level must be to lower edge of filler plug drilling.
– If necessary top up gearbox oil “Specification G 50 SAE 75W90 (synthetic oil)” to lower edge of filler plug drilling.
– Fit oil filler plug -arrow- and tighten to 25 Nm.

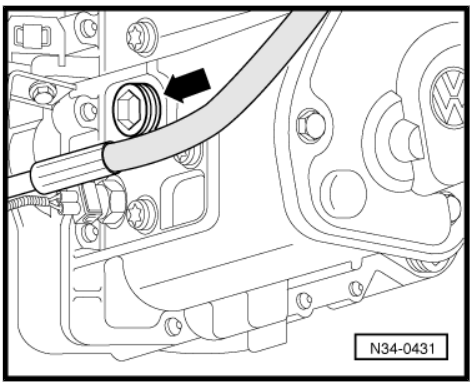

satelettronica

4.20.4 5-speed manual gearbox 02A

Carry out following procedure:

– Remove charge air cooler »Engine mechanics« ⇒ Engine mechanics; Rep. gr. 21 ; Charge air system with turbocharger »Charge air system with turbocharger«

– Remove oil filler plug -arrow-.

– Checking oil level: The oil level must be to lower edge of filler plug drilling.

– If necessary top up gearbox oil “Specification G 50 SAE 75W90 (synthetic oil)” to lower edge of filler plug drilling.

– Fit oil filler plug -arrow- and tighten to 25 Nm.

– Install charge air cooler »Engine mechanics« ⇒ Engine mechanics; Rep. gr. 21 ; Charge air system with turbocharger »Charge air system with turbocharger«

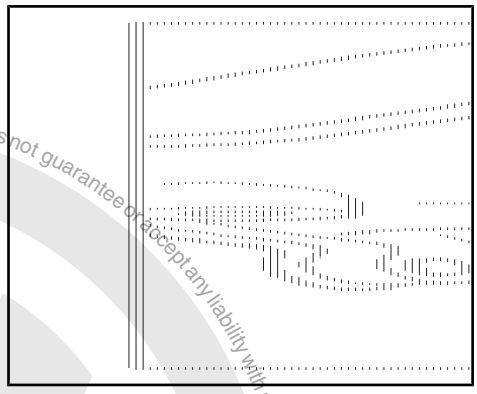

4.21 Automatic gearbox: checking final drive oil level

Special tools and workshop equipment required

♦ Extraction unit - V.A.G 1358 A-

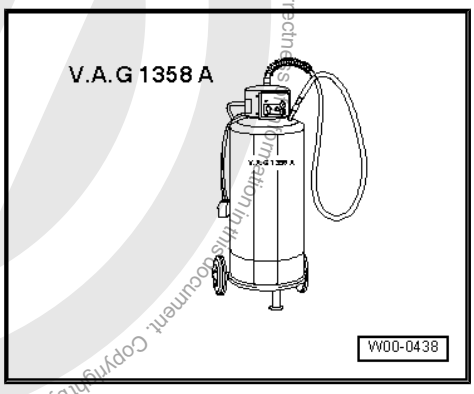

Carry out following procedure:

– Pull off connector -1- and remove speedometer drive -2-, wipe off with a cloth and reinstall drive.

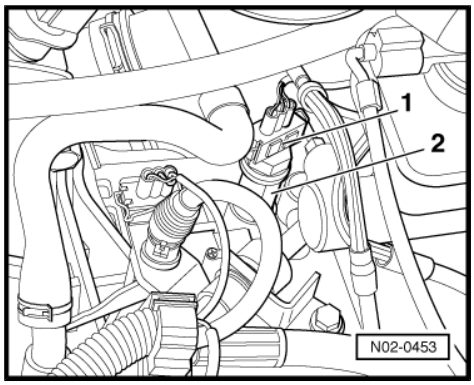

Note

Please observe disposal instructions!

– Remove drive and check oil level.

Protected by copyright. Copying for private or commercial purposes, in part or in whole, is not permitted without the express authorisation of Volkswagen AG. Volkswagen AG does not guarantee or accept any liability with respect to the correctness of information in this document. Copyright by Volkswagen AG.
satelettronica

The oil level must lie between the min. and max. markings.

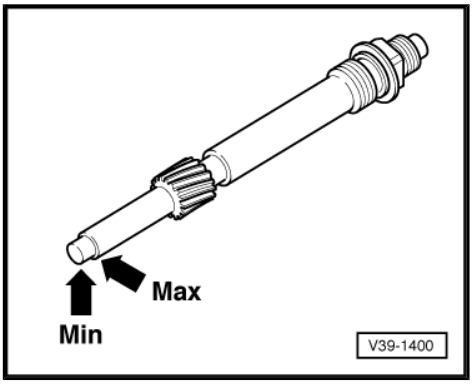

Note

Oil quantity between min. and max. markings is 0.1 l.

– If oil level is too low top up with following oil:

Gear oil SAE 75 W90 (synthetic oil). Gear oil is available under following part numbers:

- ♦ Container size 0.5 l -G 052 145 A1-
- ♦ Container size 1.0 l -G 052 145 A2-

– If oil level is too high, extract oil with extraction system - V.A.G 1358 A- .

– Install speedometer drive -2- and fit connector -1-.

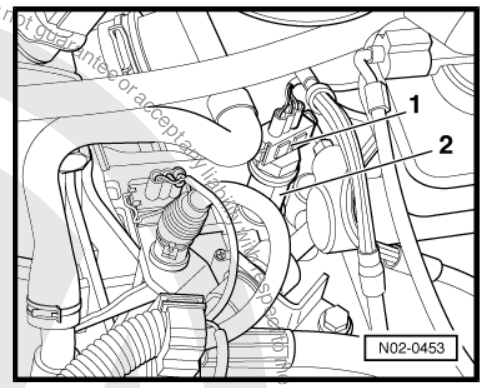

4.22 Brake system: inspecting for leaks and damage

Check following components for leaks and damage:

- ♦ Brake master cylinder
- ♦ Brake servo (for anti-lock brake system: hydraulic unit)
- ♦ Brake pressure regulator and
- ♦ Brake caliper

– Ensure that brake hoses are not twisted.

– Additionally ensure that brake hoses do not touch any vehicle components when steering is at full lock.

– Check brake hoses are not porous or brittle.

– Check brake hoses and lines for chafing.

– Check brake connections and fastenings for correct seating, leaks and corrosion.

WARNING

Faults found must always be rectified (repair measure).

4.23 Front and rear brake pads/linings: checking thickness

Special tools and workshop equipment required

Protected by copyright. Copying for private or commercial purposes, in part or in whole, is not permitted unless authorised by Volkswagen AG. Volkswagen AG does not guarantee or accept any liability with respect to the correctness of information in this document. Copyright by Volkswagen AG.
satelettronica

♦ Pliers - 3314-

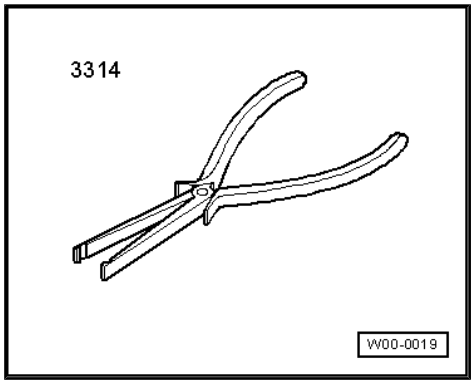

♦ Torque wrench - V.A.G 1332-

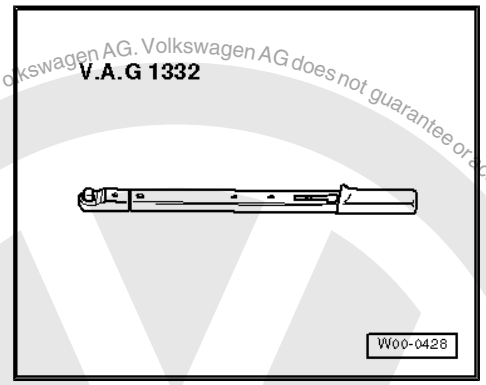

and if necessary, if anti-theft wheel bolts are installed:

♦ Adapter set for tamper-proof wheel bolts - T10101-

♦ Electric hand torch and mirror

Carry out following procedure:

Removing full sized wheel trims

The puller hooks to remove the wheel trims are located in the vehicle tool kit.

Wheel bolts

The adapter to loosen and tighten the anti-theft wheel bolts is found in the vehicle tool kit or use the adapter set for wheel bolts - T10101- .

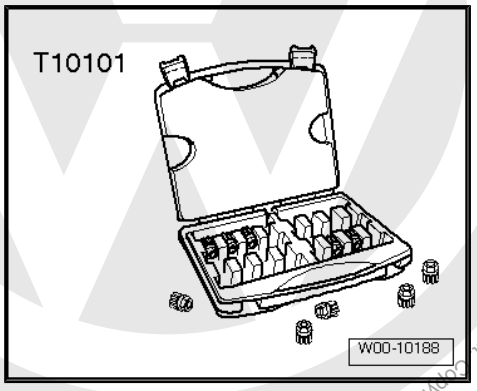

4.23.1 Front brake pads

– For better evaluation of remaining pad thickness, remove the wheel on front passenger side (greater wear than on driver side).

– If necessary, pull wheel bolt covers off with pliers - 3314- or pull full sized wheel trim off.

– Mark position of wheel relative to brake disc.

– Unbolt wheel bolts and remove wheel.

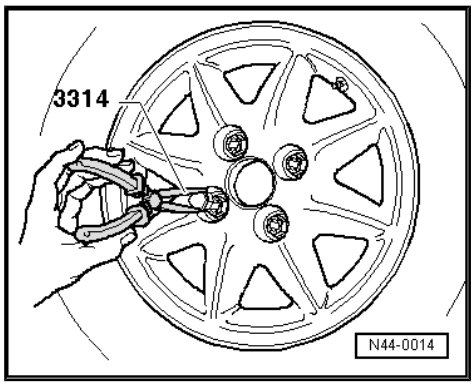

Protected by copyright. Copyright by Volkswagen AG. Volkswagen AG does not guarantee or accept any liability with respect to the correctness of information in this document. Copying for private or commercial purposes, in part or in whole, is not permitted unless authorised by Volkswagen AG.
satelettronica

– Measure thickness of inner and outer pads.

a - Brake pad thickness without backplate

Wear dimension: 2 mm

The brake pads have reached their wear limit at a pad thickness of 2 mm (without backplate) and must be renewed (repair measure). Inform customer!

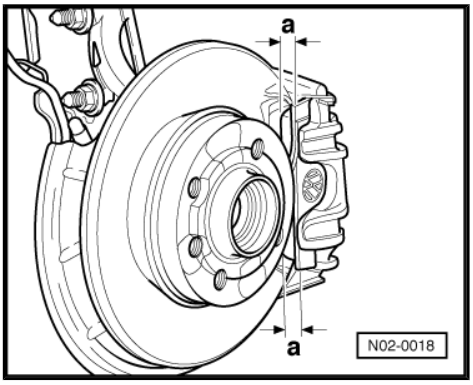

Note

When replacing brake pads, always check brake discs as well for wear! Checking and if necessary replacing the brake discs is a repair measure.

– Check brake disc for wear »Brake systems« ⇒ Brake systems; Rep. gr. 46 ; Repairing front brakes »Repairing front brakes«

– Install wheel in marked position.

– Tighten wheel bolts diagonally and alternately to following specified torque:

Specified torque: 120 Nm

– Place puller hooks and adapter with vehicle tool kit after completing work.

– Reinstall wheel bolt covers if necessary.

Installing full sized wheel trim

– Install full sized wheel trim so that the tyre filler valve is guided through the cut-out provided -arrow-.

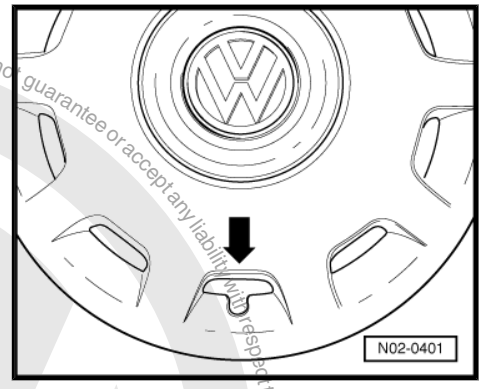

4.23.2 Rear drum brake pads

– Check thickness of brake pads through the hole -arrow B- and inspection hole in backplate -arrow A- (with a torch).

Wear limit: 2.5 mm (pad thickness only)

At a pad thickness of 2.5 mm the brake pads have reached their wear limit and must be renewed (repair measure). Inform customer!

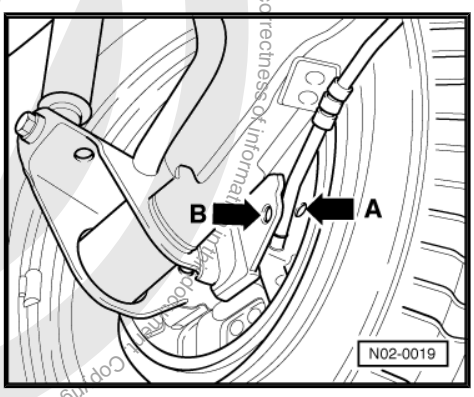

Note

Check pads for brake fluid or grease contamination.

4.23.3 Rear brake pads

– Remove full sized wheel trim if necessary.

Protected by copyright. Copying for private or commercial purposes, in part or in whole, is not permitted unless authorised by Volkswagen AG. Volkswagen AG does not guarantee or accept any liability with respect to the correctness of information. Copyright by Volkswagen AG.
satelettronica

– Illuminate area behind hole in wheel using an electric hand torch.

– Inspect outer pad to determine thickness.

– Inspect inner pad to determine thickness.

a - Inner and outer pad thickness without backplate

Wear dimension: 2 mm

The brake pads have reached their wear limit at a pad thickness of 2 mm (without backplate) and must be renewed (repair measure). Inform customer!

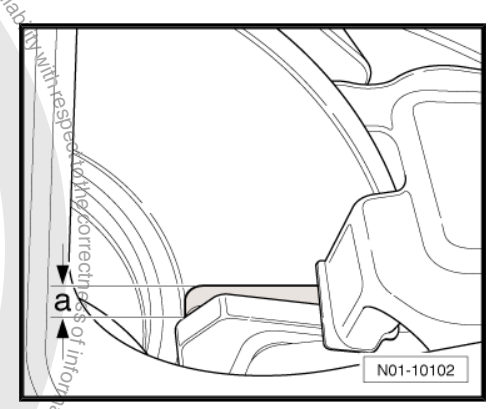

Note

When replacing brake pads, always check brake discs as well for wear! Checking and if necessary replacing the brake discs is a repair measure.

– Check brake disc for wear »Brake systems« ⇒ Brake systems; Rep. gr. 46 ; Repairing rear brakes »Repairing rear brakes«

– Install full sized wheel trim.

4.24 Underbody protection: visual check for damage

During inspection, also check floor pan, wheel housings and sills.

Note

Faults found must always be rectified (repair measure). This inhibits corrosion and rusting through.

4.25 Track rod ends: checking clearance, firm seating and boots

Carry out following procedure:

– With vehicle raised (wheels hanging free), check play by moving track rods -arrow- and wheels. Clearance: zero clearance

– Check attachment.

– Check if boots are not damaged and are seated correctly.

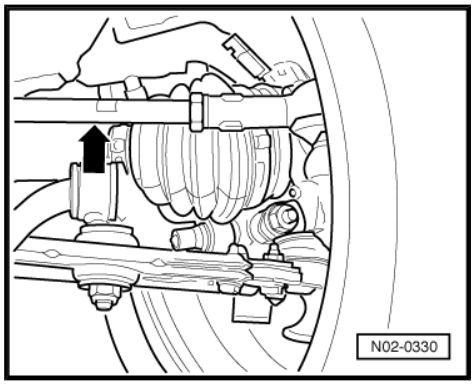

satelettronica

4.26 Swivel joints: inspecting

– Check swivel joint boots -arrow- for leaks and damage.

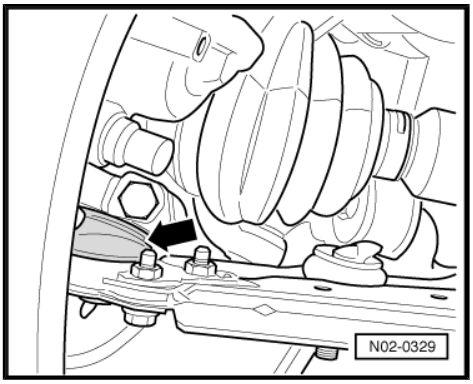

4.27 Cooling system: checking coolant level and frost protection

Note

- *Coolant additive G 12 Plus according to TL VW 774 F prevents frost and corrosion damage, scaling and also raises boiling point of coolant. For these reasons, the cooling system must be filled all-year-round with a frost and corrosion protection additive.*
- *Thanks to its high boiling point, the coolant improves engine reliability under heavy loads, particularly in countries with tropical climates.*
- *The coolant concentration must not be reduced by adding water even in warmer seasons and in warmer countries. The antifreeze portion must be at least 40%.*

4.27.1 Coolant level: checking, replenishing coolant if necessary

– Check coolant level on expansion tank with engine cold.

- Delivery inspection: coolant level at max. marking.
- Inspection service: coolant level between min. and max. marking.

– If coolant is too low, add required amount according to mixture ratio.

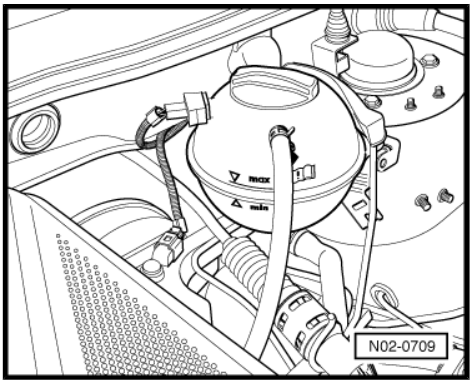

Note

If fluid loss is greater than can be expected through normal use, determine source and rectify (repair measure).

Mixing ratio

Frost protection to	Coolant additive G 12 Plus/ TL VW 774 F	Water
-25°C	approx. 40%	approx. 60%
-35°C	approx. 50%	approx. 50%
-40°C	approx. 60%	approx. 40%

Protected by copyright. Copyright by Volkswagen AG. Volkswagen AG does not guarantee or accept any liability with respect to the correctness of information in this document. Copyright by Volkswagen AG. Protected by copyright. Copying for private or commercial purposes, in part or in whole, is not permitted unless authorised by Volkswagen AG.
satelettronica

4.27.2 Frost protection: checking and replenishing coolant additive if necessary

Special tools and workshop equipment required

- Refractometer - T10007-

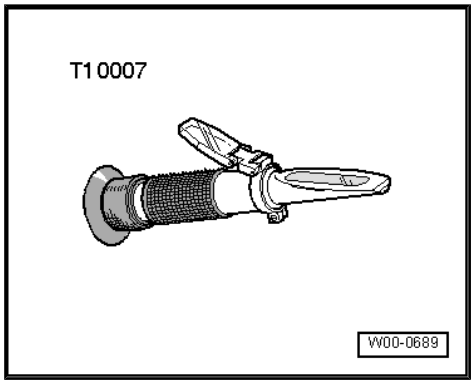

Note

Read precise value for the following tests at light-dark border. Using a pipette, place a drop of water on the glass to improve the readability of the bright/dark boundary. The light-dark border can be clearly recognised on the "WATERLINE".

– Check concentration of coolant additive using refractometer - T10007- (refer to operating instructions).

The scale -1- of the refractometer - T10007- is calibrated for coolant additives -G 12-, -G 12 Plus- and -G 11-.

The scale -2- is calibrated for coolant additive -G 13-.

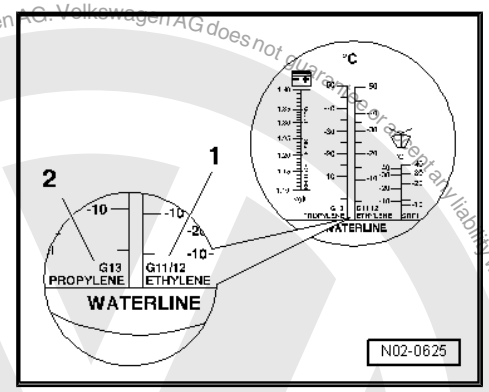

Note

- *At present the coolant additive -G 13- can be used only on vehicles type "L 80".*
- *Frost protection is required down to about -25°C (in countries with arctic climates: down to about -35°C).*
- *If for climatic reasons a greater frost protection is required, the amount of coolant additive can be increased, but only up to 60% (frost protection to about -40°C), as otherwise frost protection is reduced again and cooling effectiveness is also reduced.*

– If frost protection is insufficient, drain off required quantity shown in frost protection table and add coolant additive -G12-.

Frost protection table

Frost protection to °C		Quantity to drain (in litres)
Actual value	Specified value	
0	-25	3.0
	-35	3.5
-5	-25	2.5
	-35	3.5
-10	-25	2.0
	-35	3.0

satelettronica
Protected by copyright. Copying for private or commercial purposes, in part or in whole, is not permitted unless authorised by Volkswagen AG. Volkswagen AG does not guarantee or accept any liability with respect to the correctness of information in this document. Copyright by Volkswagen AG.

Frost protection to °C		Quantity to drain (in litres)
Actual value	Specified value	
-15	-25	1.5
	-35	2.5
-20	-25	1.0
	-35	2.5
-25	-35	2.0
-30	-35	1.0
-35	-40	0.5

Note

Please observe disposal instructions!

– After road test check coolant additive concentration.

4.28 Spark plugs: renewing

Special tools and workshop equipment required

♦ Spark plug socket - 3122 B-

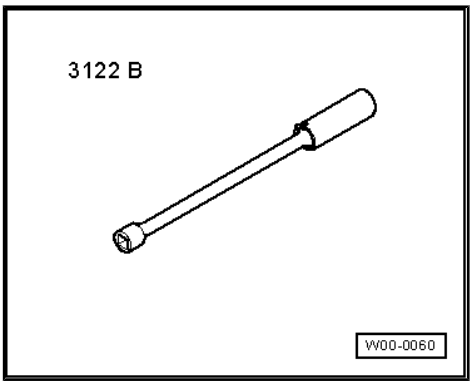

♦ Assembly tool - T10029-

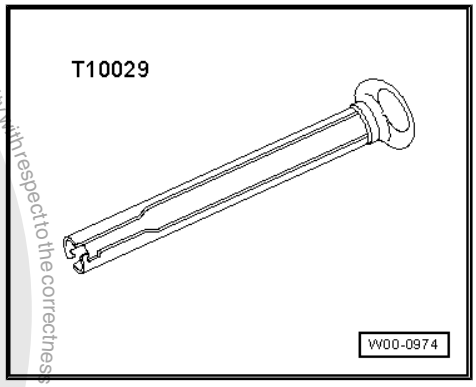

Protected by copyright. Copying for private or commercial purposes, in part or in whole, is not permitted unless authorised by Volkswagen AG. Volkswagen AG does not guarantee or accept any liability with respect to the correctness of information in this document. Copyright by Volkswagen AG.
satelettronica

- Torque wrench - V.A.G 1331-

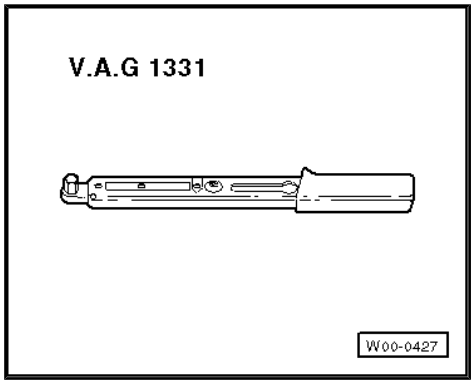

4.28.1 Engine codes ADZ, AFT and 1F

Carry out following procedure:

– Pull off spark plug connector and unscrew spark plugs with spark plug socket and extension - 3122 B- .

– Screw in new spark plugs using spark plug socket and extension - 3122 B- .

Note

- *For spark plug designation and torque setting, see »Engine mixture preparation« ⇒ Engine mixture preparation; Rep. gr. 28 ; Checking glow plug system »Checking glow plug system«*
- *Please observe disposal instructions!*

– Fit spark plug connectors.

4.28.2 Engine codes AEE, AEX, AKV, ALM, ANX and APQ

Carry out following procedure:

– Pull intake air preheating hose -arrow- off exhaust manifold.

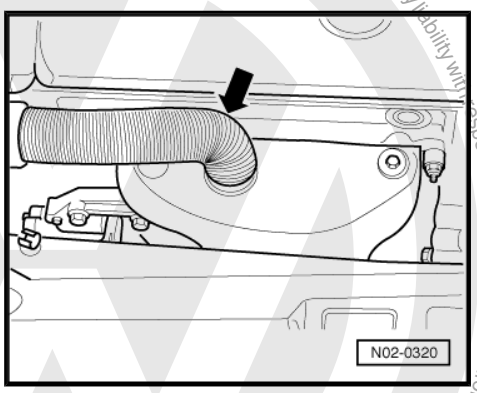

Note

- *The air filter securing bolts must be loosened or tightened only by hand. When loosening or tightening the securing bolts it is only permitted to use a power screwdriver if:*
- *Speed of power screwdriver max. 200 rpm*
- *Specified torque: max. 3 Nm*

Protected by copyright. Copying for private or commercial purposes, in part or in whole, is not permitted unless authorised by Volkswagen AG. Volkswagen AG does not guarantee or accept any liability with respect to the correctness of information in this document. Copyright by Volkswagen AG.
satelettronica

– Unscrew bolts -arrows- and remove air filter completely.

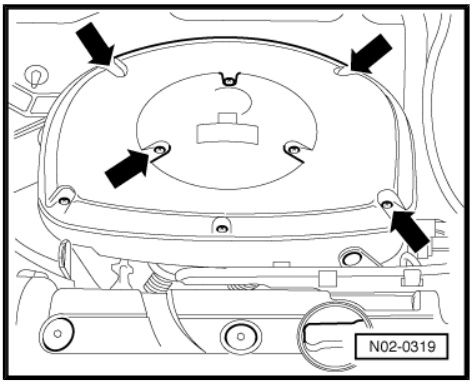

– Pull off spark plug connector and unscrew spark plugs with spark plug socket and extension - 3122 B- .

– Screw in new spark plugs using spark plug socket and extension - 3122 B- .

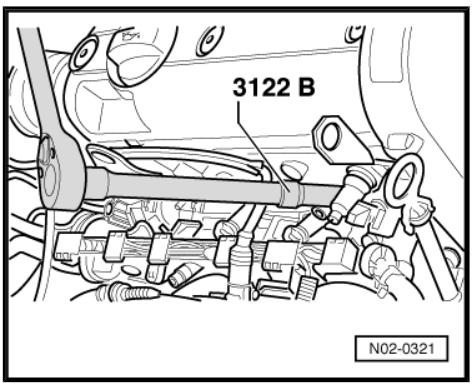

Note

- *For spark plug designation and torque setting, see »Engine mixture preparation« ⇒ Engine mixture preparation; Rep. gr. 28 ; Checking glow plug system »Checking glow plug system«*
- *Please observe disposal instructions!*

– Fit spark plug connectors.

– Insert filter housing and tighten cross head bolts -arrows-.

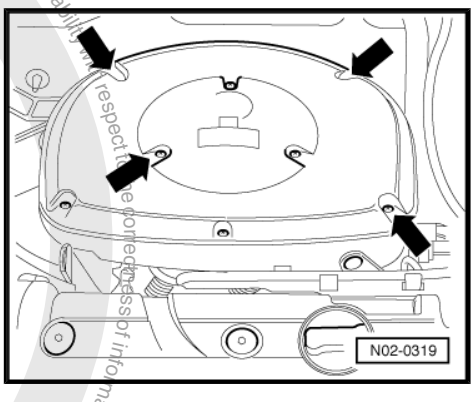

4.28.3 Engine codes AEH, AKL, APF and AUR

Carry out following procedure:

– Lever off cover caps -arrows- in engine cover -A- with a screwdriver.

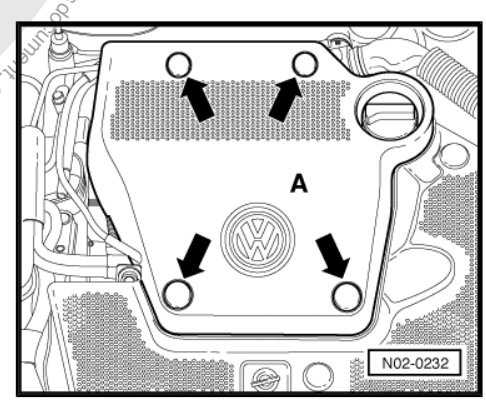

Protected by copyright. Copying for private or commercial purposes, in part or in whole, is not permitted unless authorised by Volkswagen AG. Volkswagen AG does not guarantee or accept any liability with respect to the correctness of information in this document. Copyright by Volkswagen AG.
satelettronica

Protected by copyright. Copying for private or commercial purposes, in part or in whole, is not permitted unless authorised by Volkswagen AG. Volkswagen AG does not guarantee or accept any liability with respect to the correctness of information in this document. Copyright by Volkswagen AG.

– Remove securing nuts -arrows-.
– Take engine cover -A- off upwards.

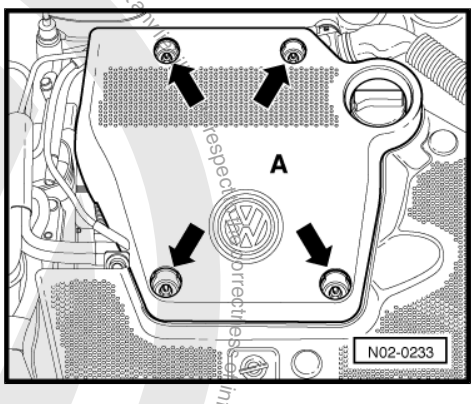

– Lever off cover caps for securing nuts in second engine cover with a screwdriver and remove securing nuts -arrows-.
– Take engine cover panel off upwards.

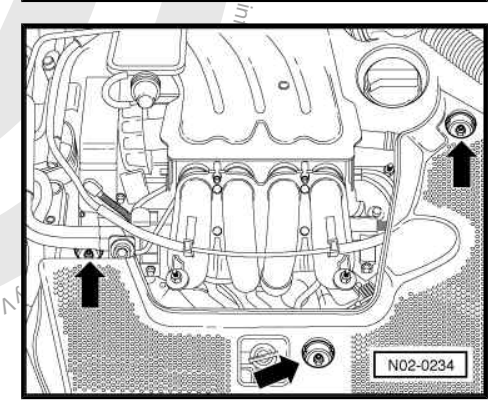

– Pull off spark plug connector -arrows- with assembly tool - T10029- . The outer -arrows- (left and right) point to the hidden spark plug connectors.

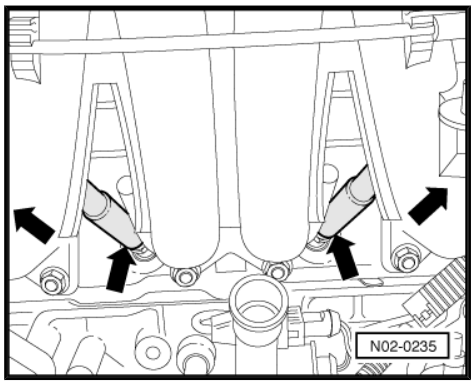

– Unscrew spark plugs using spark plug socket and extension - 3122 B- -arrow-.

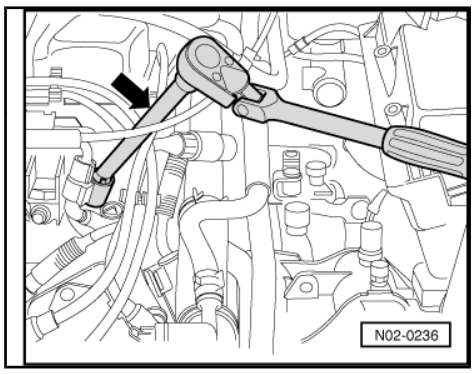

Note

- *For spark plug designation and torque setting, see »Engine mixture preparation« ⇒ Engine mixture preparation; Rep. gr. 28 ; Checking glow plug system »Checking glow plug system«*
- *Please observe disposal instructions!*

– Screw in new spark plugs using spark plug socket and extension - 3122 B- .
– Fit spark plug connectors using assembly tool - T10029- .
– Check that ignition cables and spark plug connectors are fitted securely.

satelettronica

– Insert engine cover, tighten nuts -arrows- and clip in cover caps for securing nuts.

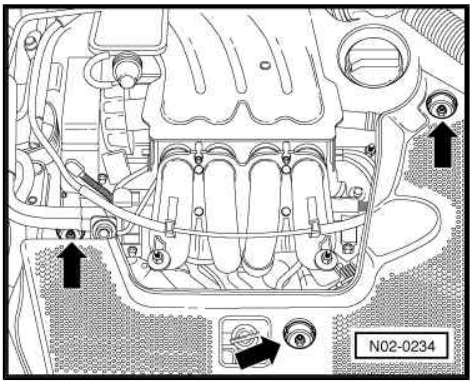

– Install engine cover and secure with hexagon nuts -arrows-.

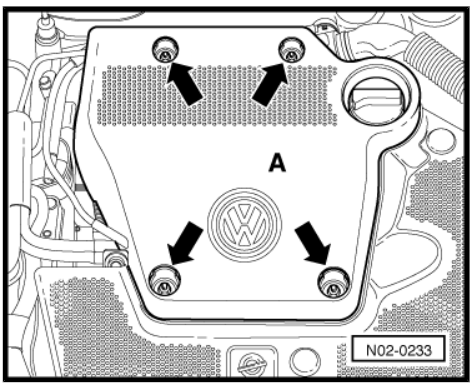

– Clip-in cover caps -arrows- for securing nuts.

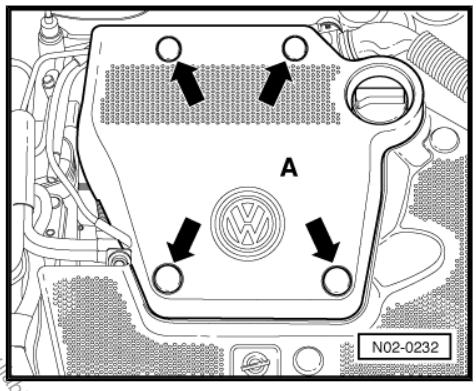

4.28.4 Engine codes AKK, ANW and AUD

Carry out following procedure:

– Unclip caps -1- and remove bolts (below caps).

– Remove ignition cable -2- from air filter housing.

– If necessary, loosen hose clamp -3- using pliers for spring-type clips - V.A.G 1921- and pull hose off.

– Pull crankcase breather hose -arrow- off air filter housing.

– Pull off exhaust gas recirculation hose on left side of air filter housing and remove filter housing.

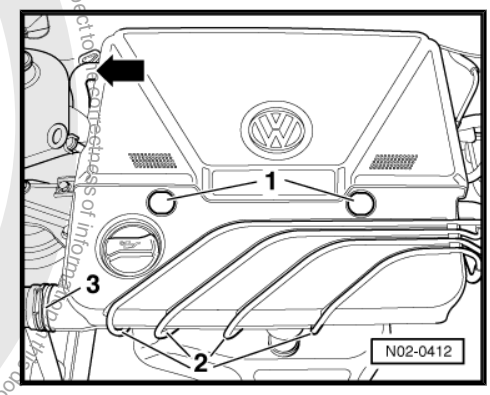

Protected by copyright. Copying for private or commercial purposes, in part or in whole, is not permitted unless authorised by Volkswagen AG. Volkswagen AG does not guarantee or accept any liability with respect to the correctness of information in this document. Copyright by Volkswagen AG.

satelettronica

– Pull off spark plug connector and unscrew spark plugs with spark plug socket and extension - 3122 B- .

– Screw in new spark plugs using spark plug socket and extension - 3122 B- .

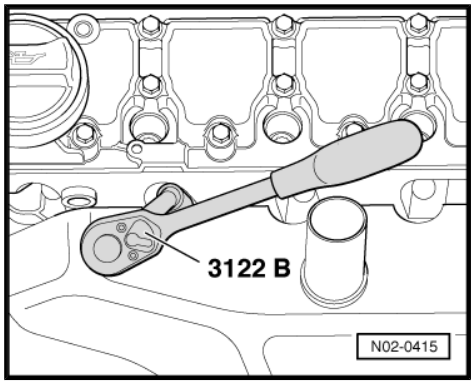

Note

♦ *For spark plug designation and torque setting, see »Engine mixture preparation« ⇒ Engine mixture preparation; Rep. gr. 28 ; Checking glow plug system »Checking glow plug system«*

♦ *Please observe disposal instructions!*

– Fit spark plug connectors.

– Insert filter housing.

– Tighten securing bolts and fit caps -1-.

– Press ignition cables -2- into air filter housing.

– Fit hose and secure with hose clip -3-.

– Connect crankcase breather hose -arrow- to air filter housing.

– Connect exhaust gas recirculation hose to left side of air filter housing.

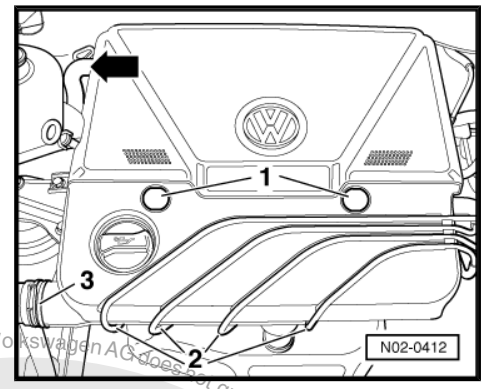

4.28.5 Engine codes APE, AQQ and AUA

Carry out following procedure:

– Remove hexagon socket head bolts -arrows- and take off engine cover.

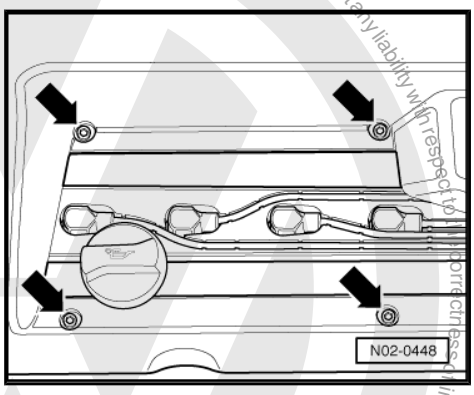

– Remove oil filler cap -1-.

– Take ignition cables -2- out of cover -3- and pull cover upwards slightly.

– Pull off spark plug connectors and place ignition cables with cover to side.

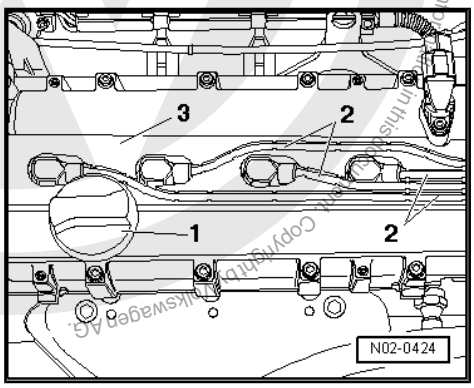

Protected by copyright. Copying for private or commercial purposes, in part or in whole, is not permitted unless authorised by Volkswagen AG. Volkswagen AG does not guarantee or accept any liability with respect to the correctness of information in this document. Copyright by Volkswagen AG.

satelettronica

– Unscrew spark plugs using spark plug socket - 3122 B- .
– Screw in new spark plugs with spark plug wrench - 3122 B- .

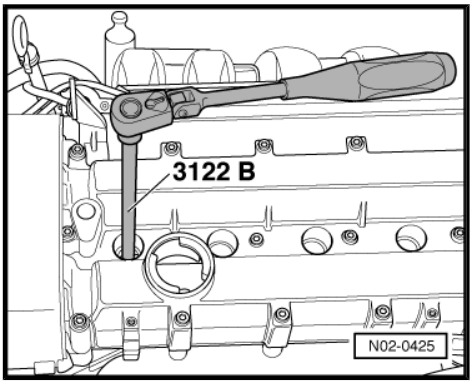

Note

- *For spark plug designation and torque setting, see »Engine mixture preparation« ⇒ Engine mixture preparation; Rep. gr. 28 ; Checking glow plug system »Checking glow plug system«*
- *Please observe disposal instructions!*

– Install spark plug cover.

– Install oil filler cap -1-.
– Fit spark plug connectors.
– Press ignition cables -2- into channels in spark plug cover.

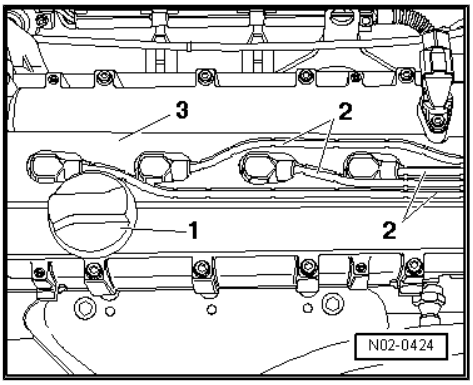

– Install engine cover and secure with hexagon socket head bolts -arrows-.

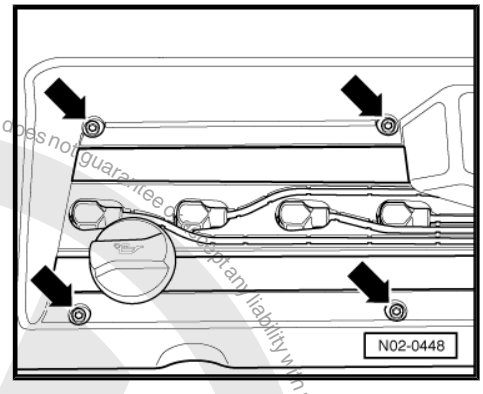

4.29 Dust and pollen filter: renewing filter element

Special tools and workshop equipment required

- Torque wrench - V.A.G 1331-

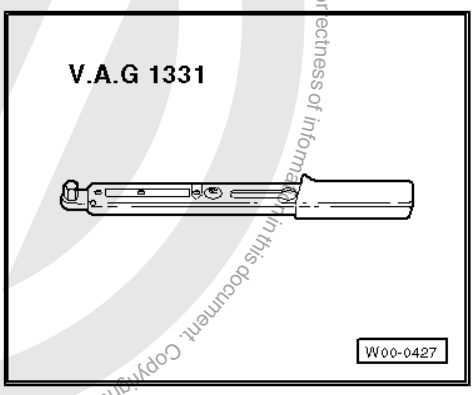

The filter is located on right in the plenum chamber under a cover.

Carry out following procedure:

Protected by copyright. Copying for private or commercial purposes, in part or in whole, is not permitted unless authorised by Volkswagen AG. Volkswagen AG does not guarantee or accept any liability with respect to the correctness of information in this document. Copyright by Volkswagen AG.
satelettronica

4.29.1 Removing

Vehicles ►09.99

Note

Before removing the wiper arm, ensure that the wiper motor is in park position. Only in this way the wiper arm park position can be adjusted correctly when installing.

- Pull off rubber seal -1- of plenum chamber cover upwards.
- Remove cross head bolt -2-.
- Lever off cover cap -3- using a screwdriver.
- Loosen hexagon nut below cover cap -3-, do not unscrew completely.
- Loosen wiper arm by moving lightly.
- Unscrew hexagon nut completely and remove wiper arm.
- Loosen plastic bolts -4- and remove bolts with clips.
- Carefully remove plenum chamber cover on right upwards.

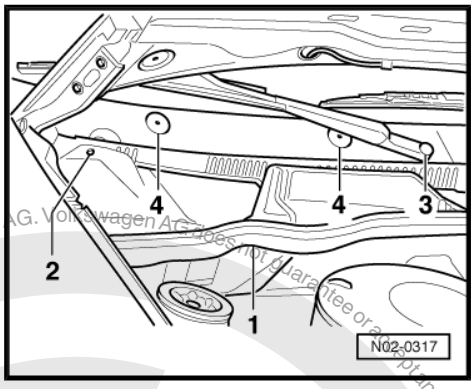

Vehicles 10.99►

- From the right-hand side of plenum chamber cover pull rubber seal -1- off upwards to vehicle centre.
- Unclip plenum chamber cover -2- and carefully pull out upwards.

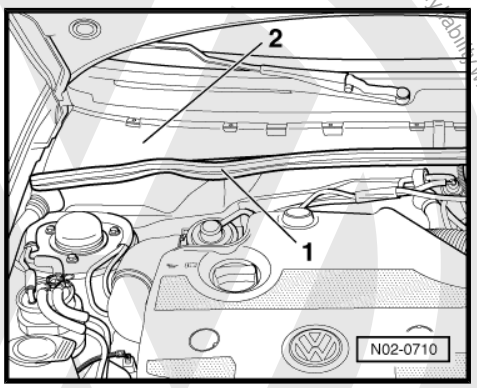

Continued for all vehicles

- Unclip cover cap in front of lugs -A- and remove (if fitted).
- Press filter housing lugs -A- in -direction of arrow- and take filter element with frame out upwards.
- Separate filter element from frame.

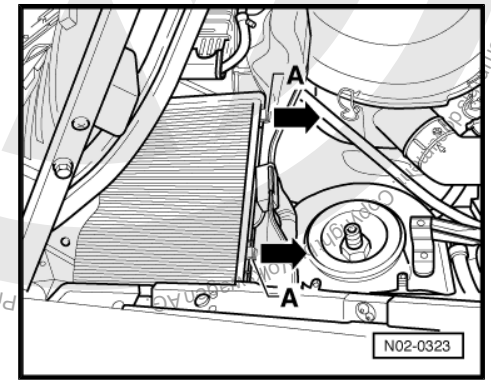

Note

Please observe disposal instructions!

Protected by copyright. Copying for private or commercial purposes, in part or in whole, is not permitted unless authorised by Volkswagen AG. Volkswagen AG does not guarantee or accept any liability with respect to the correctness of information in this repair manual.
satelettronica

– Guide frame -A- on left and right into the first lamination of the new filter element -arrows B-.
– Guide frame lugs -C- into filter housing recesses -D- and press frame with filter element downwards.

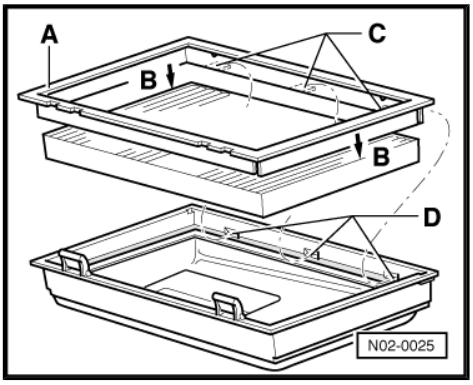

4.29.2 Installing

Install in the reverse order of removal observing the following on vehicles ►09.99:

When installing the wiper arm the park position must be adjusted ⇒ page 61 .

Specified torque for wiper arm: 20 Nm

4.30 Camshaft drive belt: checking (petrol engine)

Toothed belt: checking condition

– Open clips for upper toothed belt guard and remove cover.
– Check condition of toothed belt for:
- Cracks, cross sectional breaks
- Layer separation (toothed belt body, tensile cords)
- Toothed belt body breakup
- Frayed cord strands
- Surface cracks (synthetic coating)
- Traces of oil and grease

Note

If faults are found, always renew toothed belt. This can avoid breakdowns and malfunctions. The replacement of a toothed belt is a repair measure.

When checking condition, especially watch for following damage:

-A- Cracks (coating)

-B- Side contact

-C- Fraying

-D- Cracks (in teeth base)

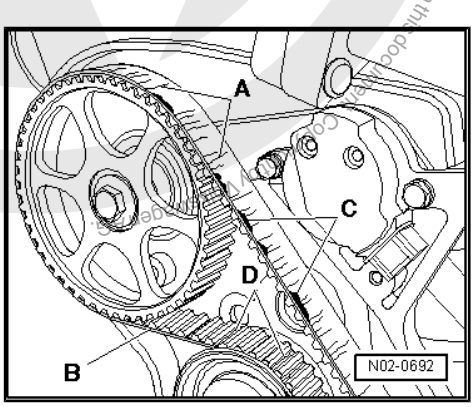

Protected by copyright. Copying for private or commercial purposes, in part or in whole, is not permitted unless authorised by Volkswagen AG. Volkswagen AG does not guarantee or accept any liability with respect to the correctness of information in this document. Copyright by Volkswagen AG.
satelettronica

Protected by copyright. Copying for private or commercial purposes, in part or in whole, is not permitted unless authorised by Volkswagen AG. Volkswagen AG does not guarantee or accept any liability with respect to the correctness of information in this document. Copyright by Volkswagen AG.

4.31 Toothed belt: checking for wear (SDI/ TDI engines ►2000)

Special tools and workshop equipment required

- Vernier caliper (commercially available)

4.31.1 Engine codes AEY, AFN, AHB, AHU, AKW and ALE

Carry out following procedure:

– Remove air cleaner completely.

– Unclip the clamps -1- from toothed belt guard.

– Unscrew cross head bolt -2- and remove toothed belt guard.

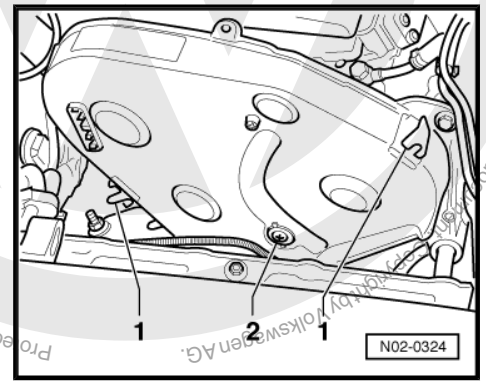

– Measure the width of the toothed belt with a vernier caliper.

Wear dimension: 22 mm

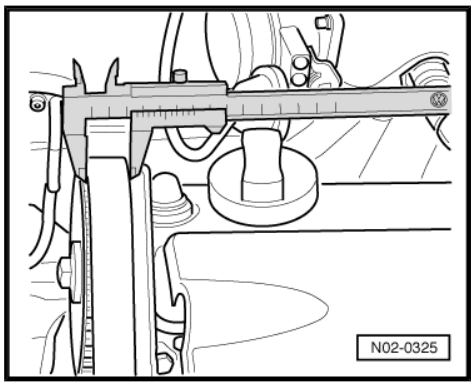

Note

When a toothed belt has reached a width of 22 mm, the wear limit has been reached and it must be renewed (repair measure). Inform customer!

WARNING

The engine must never under any circumstances be turned over using the camshaft when checking and making adjustments. Not observing this can lead to severe engine damage.

4.31.2 Engine codes AGP, AGR, ALH, AQM, ASK and ASV

Carry out following procedure:

– Remove engine cover panel.

– Open clips on upper toothed belt guard.

– Pull upper toothed belt guard to side or remove.

satelettronica

– Measure the width of the toothed belt with a vernier caliper.

Wear dimension: 22 mm

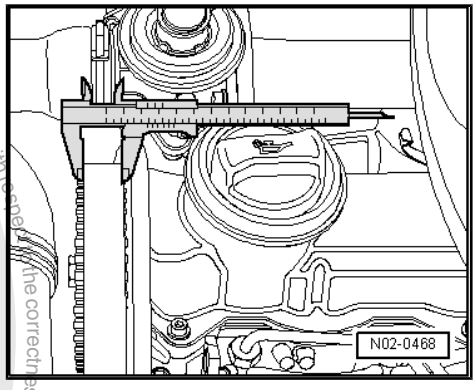

Note

When a toothed belt has reached a width of 22 mm, the wear limit has been reached and it must be renewed (repair measure). Inform customer!

WARNING

The engine must never under any circumstances be turned over using the camshaft when checking and making adjustments. Not observing this can lead to severe engine damage.

4.32 Camshaft drive toothed belt: checking condition and tension (diesel engine with engine code ALH and automatic gearbox)

4.32.1 Toothed belt: checking condition

– Open clips for upper toothed belt guard and remove cover.

– Check condition of toothed belt for:

- Cracks, cross sectional breaks
- Layer separation (toothed belt body, tensile cords)
- Toothed belt body breakup
- Frayed cord strands
- Surface cracks (synthetic coating)
- Traces of oil and grease

Note

If faults are found, always renew toothed belt. This can avoid breakdowns and malfunctions. The replacement of a toothed belt is a repair measure.

When checking condition, especially watch for following damage:

-A- Cracks (coating)

-B- Side contact

-C- Fraying

-D- Cracks (in teeth base)

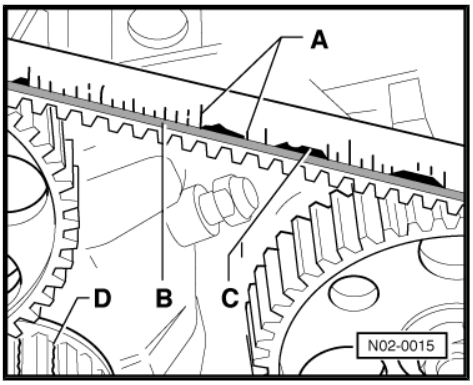

Note

To check the toothed belt tension, the upper toothed belt cover must remain removed.

Protected by copyright. Copying for private or commercial purposes, in part or in whole, is not permitted unless authorised by Volkswagen AG. Volkswagen AG does not guarantee or accept any liability with respect to the correctness of information in this document. Copyright by Volkswagen AG.
satelettronica

4.32.2 Checking toothed belt tension

– Check eccentric on tensioning roller if indicator -1- and marking lug -2- align.

When the indicator -1- and the marking tab -2- align, the check is finished.

If the indicator and the marking tab do not align, the toothed belt must be tensioned.

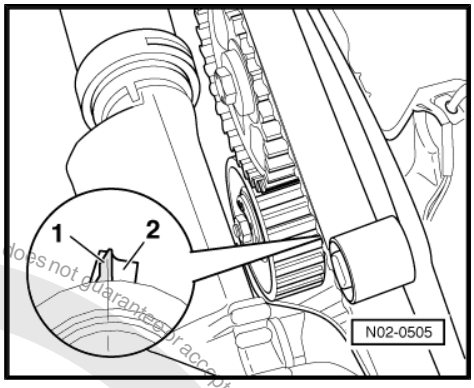

4.32.3 Tensioning toothed belt

Special tools and workshop equipment required

♦ Pliers for spring-type clips - V.A.G 1921-

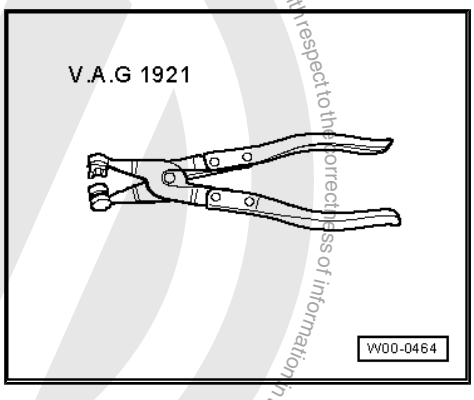

♦ Torque wrench - V.A.G 1331-

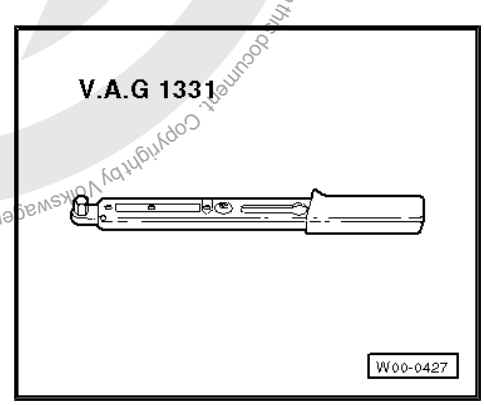

♦ Diesel injection pump locking pin - 3359-

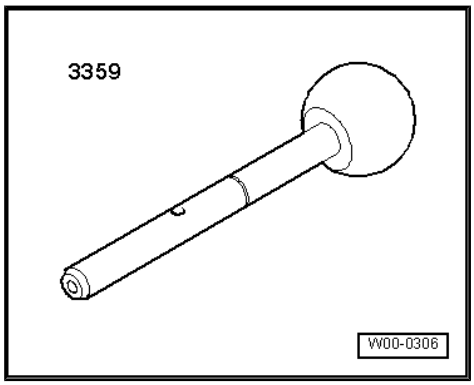

Carry out following procedure:

Protected by copyright. Copying for private or commercial purposes, in part or in whole is not permitted unless authorised by Volkswagen AG. Volkswagen AG does not guarantee or accept any liability with respect to the correctness of information in this document. Copyright by Volkswagen AG.

satelettronica

– Open hose clips -arrows- with pliers for spring-type clips - V.A.G 1921- and pull off hose -1-.
– Loosen tensioning roller securing bolt.
– Check tensioning roller for damage and wear.

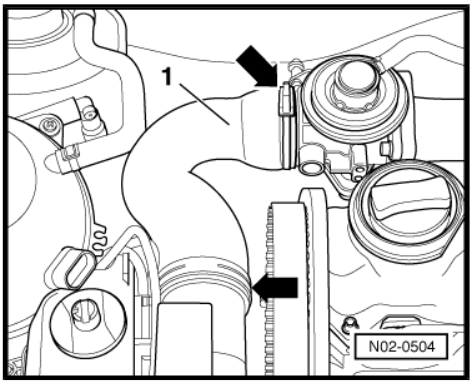

Note

If damage is determined, the tensioning roller must always be renewed (repair measure).

– Tension toothed belt. Do this by turning eccentric clockwise using a commercially available hexagon key, until the marking tab and indicator align in area of the marking tab raised portion.

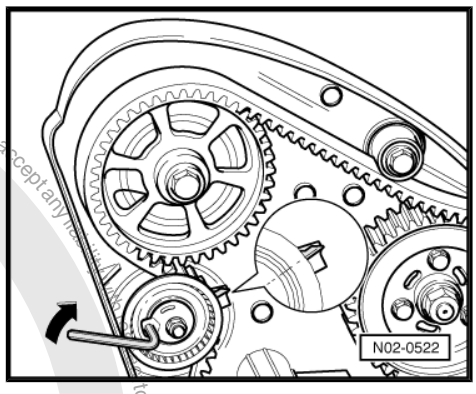

Note

If the eccentric has been turned too far the tensioning roller must be relieved completely and retensioned. The eccentric must never be turned back when it has been turned too far.

– Tighten lock nut on tensioning roller. Specified torque: 20 Nm

– Turn crankshaft two rotations in engine direction of rotation until the crankshaft is positioned at TDC No. 1 cylinder -arrow-.

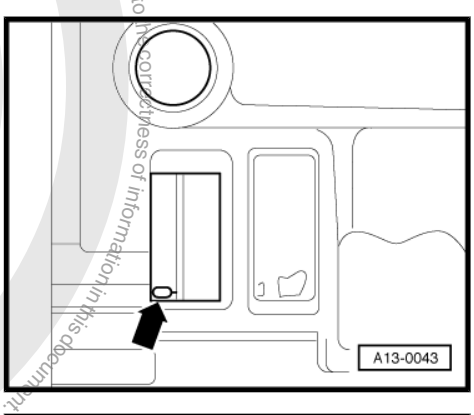

WARNING

The engine must never under any circumstances be turned over using the camshaft when checking and making adjustments. Not observing this can lead to severe engine damage.

– Lock injection pump sprocket with pin for diesel injection pump - 3359- .
– Again check if the crankshaft is at TDC for No. 1 cylinder.
– Remove pin for diesel injection pump - 3359- from injection pump sprocket.

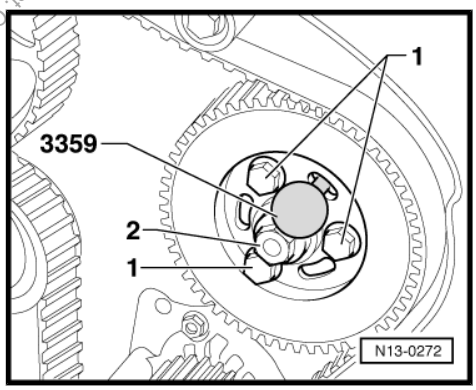

satelettronica

– Fit hose -1- and secure with hose clips -arrows-.
– Start engine and run at idling speed for approx. 1 minute.
– Switch off engine.

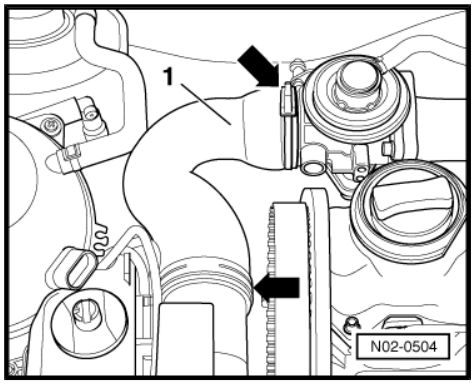

– Check eccentric on tensioning roller again that indicator -1- and marking tab -2- align in area of marking tab raised portion. If the indicator and marking tab do not align the tensioning sequence must be repeated.
– Install upper toothed belt guard.

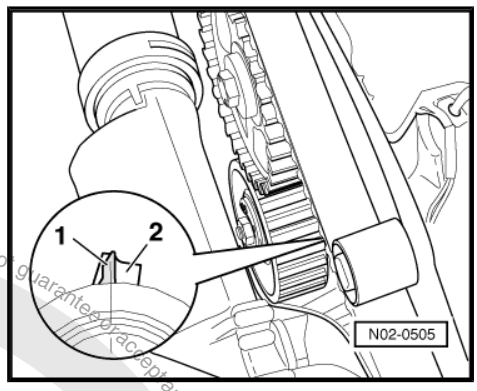

4.33 Toothed belt: checking condition and tension (diesel engine with engine code 1Y)

4.33.1 Toothed belt: checking condition

– Open clips for upper toothed belt guard and remove cover.
– Check condition of toothed belt for:
- Cracks, cross sectional breaks
- Layer separation (toothed belt body, tensile cords)
- Toothed belt body breakup
- Frayed cord strands
- Surface cracks (synthetic coating)
- Traces of oil and grease

Note

If faults are found, always renew toothed belt. This can avoid breakdowns and malfunctions. The replacement of a toothed belt is a repair measure.

Protected by copyright. Copying for private or commercial purposes, partially or in whole, is not permitted unless authorised by Volkswagen AG. Volkswagen AG does not guarantee or accept any liability with respect to the correctness of information in this document. Copyright by Volkswagen AG.
satelettronica

When checking condition, especially watch for following damage:

-A- Cracks (coating)

-B- Side contact

-C- Fraying

-D- Cracks (in teeth base)

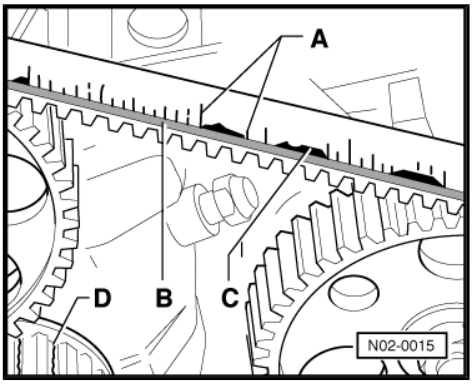

Note

To check the toothed belt tension, the upper toothed belt cover must remain removed.

4.33.2 Checking toothed belt tension

Before checking the toothed belt tension, the semi-automatic tensioning device must be checked for correct function as follows:

– Press toothed belt forcibly with thumb. Notch and raised mark -arrows- should move.

– Check tensioning roller for damage and wear.

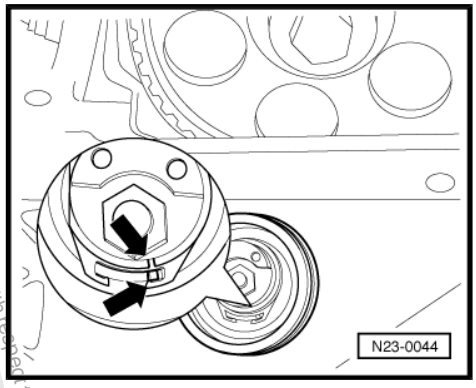

Note

If damage is determined on tensioning roller, the toothed belt tensioning roller must always be renewed (repair measure).

– Release tension on toothed belt. The tensioning roller must return to its initial position. (Notch and raised mark must align).

If the notch and raised mark -arrows- align, the check is finished.

If the notch and raised mark do not align, the toothed belt must be tensioned.

4.33.3 Tensioning toothed belt

Special tools and workshop equipment required

Protected by copyright. Copyright by Volkswagen AG.
Copyright by Volkswagen AG. Volkswagen AG does not guarantee or accept any liability with respect to the correctness of information in this document.
Copying for private or commercial purposes, in part or in whole, is not permitted unless authorised by Volkswagen AG.
satelettronica

- Pin wrench - V159-

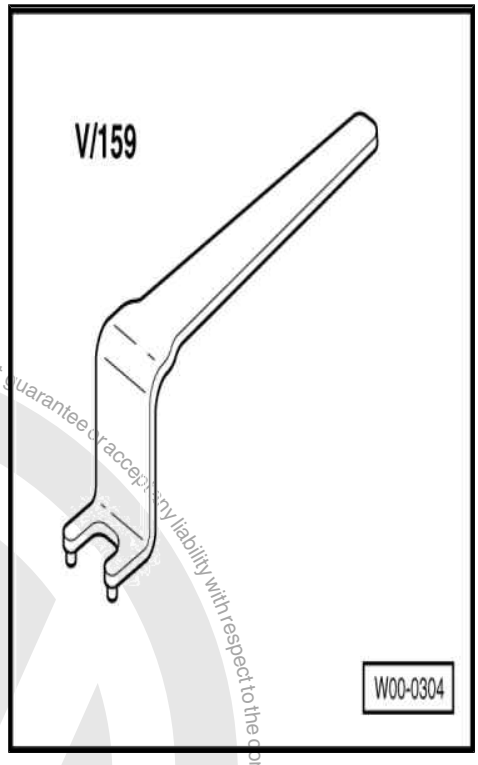

- Diesel injection pump locking pin - 3359-

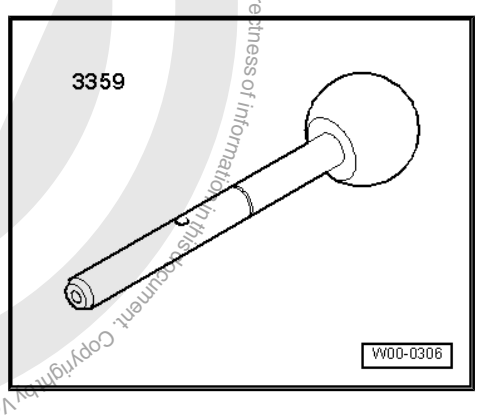

- Torque wrench - V.A.G 1331-

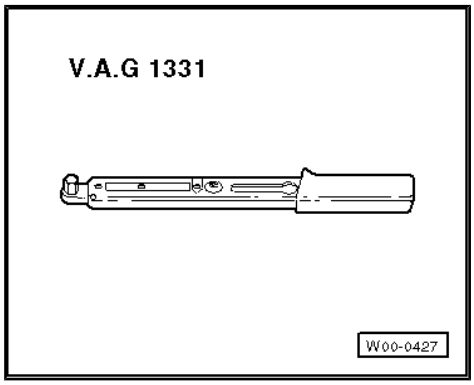

Protected by copyright. Copying for private or commercial purposes, in part or in whole, is not permitted unless authorised by Volkswagen AG. Volkswagen AG does not guarantee or accept any liability with respect to the correctness of information in this document. Copyright by Volkswagen AG.

satelettronica

Carry out following procedure:

– Loosen tensioning roller.

– Tension toothed belt. Using pin wrench (e.g. Matra V159) on eccentric turn clockwise until the notch and the raised mark -arrows- align.

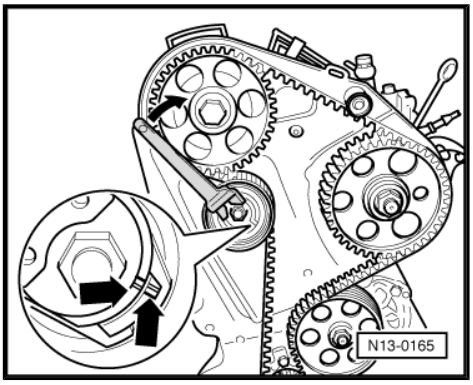

Note

If the eccentric has been turned too far the tensioning roller must be relieved completely and retensioned. The eccentric must never be turned back when it has been turned too far.

– Tighten lock nut on tensioning roller. Specified torque: 20 Nm

– Turn crankshaft two turns further in engine direction of rotation until the crankshaft is at TDC for No. 1 cylinder.

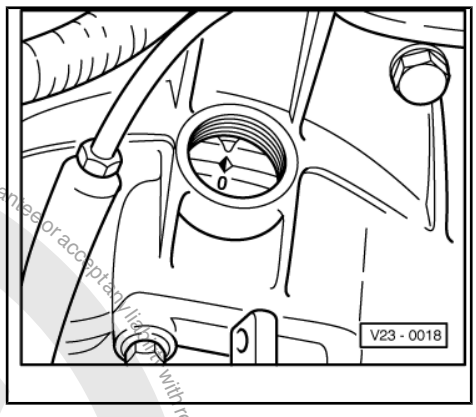

WARNING

The engine must never under any circumstances be turned over using the camshaft when checking and making adjustments. Not observing this can lead to severe engine damage.

– Lock injection pump sprocket with pin for diesel injection pump - 3359- .

– Again check if the crankshaft is at TDC for No. 1 cylinder.

– Remove pin for diesel injection pump - 3359- from injection pump sprocket.

– Repeat functional test sequence of tensioning device.

If now the notch and raised mark do not align, repeat adjusting procedure.

– Install upper toothed belt guard.

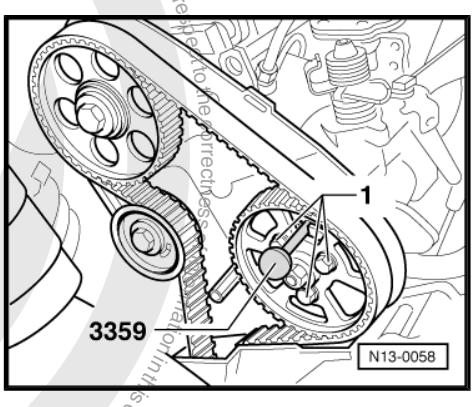

4.34 Toothed belt: renewing (diesel engine with engine codes AGP, AGR, ALH, AQM, ASK, ASV and AYQ)

– Carry out procedure »Engine mechanics« ⇒ Engine mechanics; Rep. gr. 15 ; Removing and installing cylinder head »Removing and installing cylinder head«

4.35 Toothed belt: renewing (diesel engine with engine codes AEY, AFN, AHB, AHU, AKW and ALE)

– Carry out procedure »Engine mechanics« ⇒ Engine mechanics; Rep. gr. 13 ; Dismantling and assembling engine »Dismantling and assembling engine«

Copyright by Volkswagen AG. Volkswagen AG does not guarantee or accept any liability with respect to the correctness of information in this document. Copyright by Volkswagen AG. Any transmission or distribution of this document, in whole or in part, to third parties is not permitted unless authorized by Volkswagen AG. Any use of the document or its contents for competitive purposes is not permitted unless authorized by Volkswagen AG. Any violation of the copyright will be prosecuted.

satelettronica

4.36 Air filter: cleaning housing and renewing filter element

4.36.1 Engine codes ADZ, AEY, AFN, AFT, AHB, AHU, AKW, 1F and 1Y

Carry out following procedure:

Removing

– Release spring retainers -arrows-.

– Remove filter housing upwards.

– Take out used filter element.

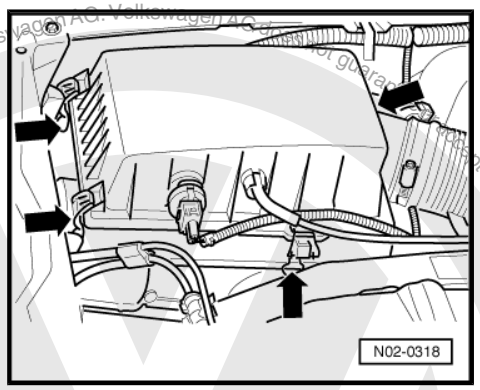

Note

Please observe disposal instructions!

Installing

– Clean filter housing and install new filter element.

– Insert filter housing and secure spring retainers -arrows-.

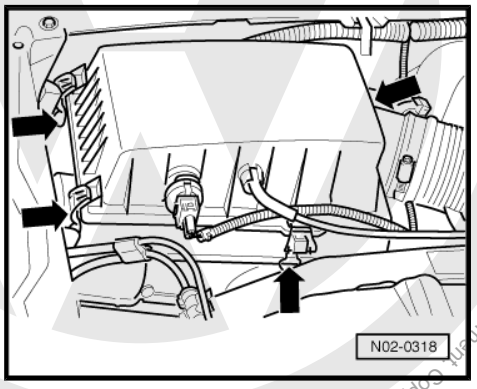

Note

When installing the air filter housing ensure that sealing surfaces are properly seated.

4.36.2 Engine codes AEE, AEX, ALM, ANX, AKV and APQ

Carry out following procedure:

Removing

Note

- *The bolts must be loosened or tightened only by hand. When loosening or tightening the securing bolts it is only permitted to use a power screwdriver if:*
- *Speed of power screwdriver max. 200 rpm*
- *Specified torque: max. 3 Nm*

Protected by copyright. Copying for private or commercial purposes, in part or in whole, is not permitted unless authorised by Volkswagen AG. Volkswagen AG does not guarantee or accept any liability with respect to the correctness of information in this document. Copyright by Volkswagen AG.
satelettronica

– Remove securing bolts -arrows-.

– Raise filter housing upper part and remove upwards.

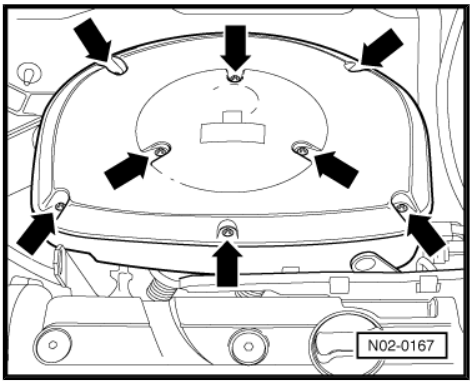

– Take out used filter element -arrow-.

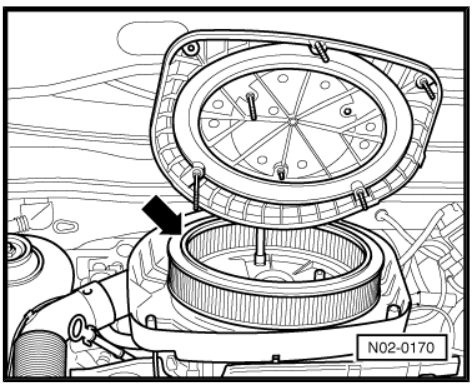

Note

Please observe disposal instructions!

Installing

Note

- *The bolts must be loosened or tightened only by hand. When loosening or tightening the securing bolts it is only permitted to use a power screwdriver if:*
- *Speed of power screwdriver max. 200 rpm*
- *Specified torque: max. 3 Nm*

– Clean filter housing and install new filter element.

– Insert filter housing upper part and tighten bolts -arrows-.

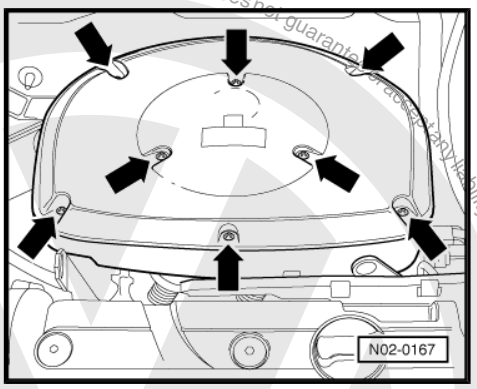

4.36.3 Engine codes AEH, AGP, AGR, AKL, ALE, ALH, APF, AQM, ASK, ASV, AUR and AYQ

Carry out following procedure:

Protected by copyright. Copying for private or commercial purposes, in part or in whole, is not permitted unless authorised by Volkswagen AG. Volkswagen AG does not guarantee or accept any liability with respect to the correctness of information in this document. Copyright by Volkswagen AG.
satelettronica

Removing

– Remove securing bolts -arrows-.
– Raise filter housing upper part and remove upwards.

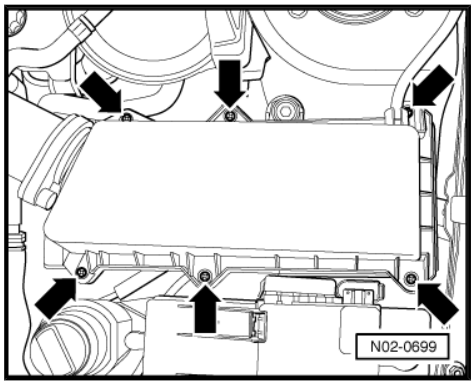

– Take out used filter element -arrow-.

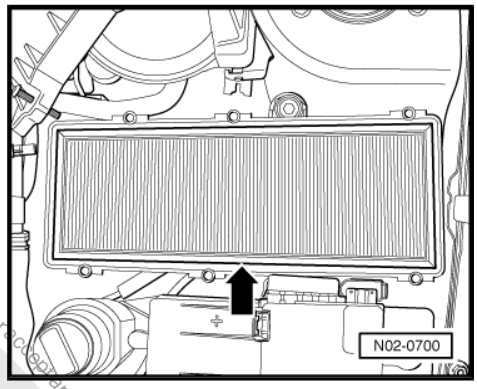

Note

Please observe disposal instructions!

Installing

– Clean filter housing and install new filter element.

– Insert filter housing upper part and tighten bolts -arrows-.

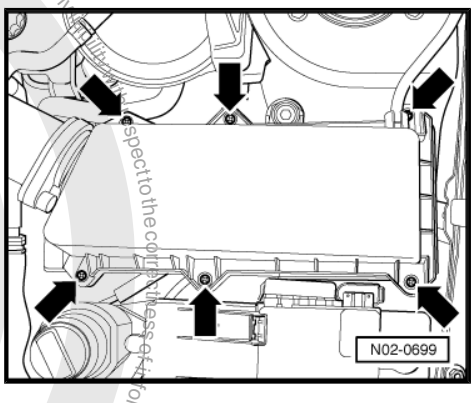

4.36.4 Engine codes AKK, ANW and AUD

Special tools and workshop equipment required

♦ Pliers for spring-type clips - V.A.G 1921-

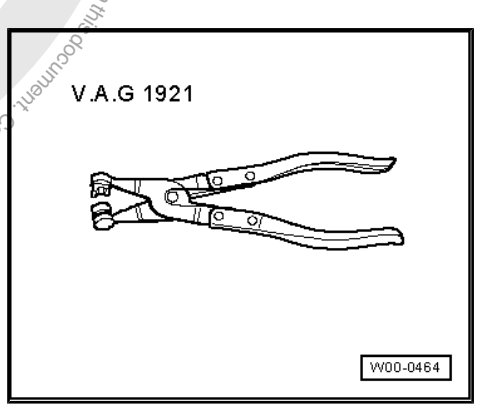

Carry out following procedure:

Protected by copyright. Copying for private or commercial purposes, in part or in whole, is not permitted unless authorised by Volkswagen AG. Volkswagen AG does not guarantee or accept any liability with respect to the correctness of information in this document. Copyright by Volkswagen AG.

satelettronica

Reproduction by copyright holders or commercial purposes, in whole or in part, is not permitted unless authorised by Volkswagen AG. Volkswagen AG does not guarantee or accept any liability with respect to the correctness of information in this repair manual.

Removing

– Unclip caps -1- and remove bolts (below caps).

– Remove ignition cable -2- from air filter housing.

– If necessary, loosen hose clamp -3- using pliers for spring-type clips - V.A.G 1921- and pull hose off.

– Pull crankcase breather hose -arrow- off air filter housing.

– Pull off exhaust gas recirculation hose on left side of air filter housing and remove filter housing.

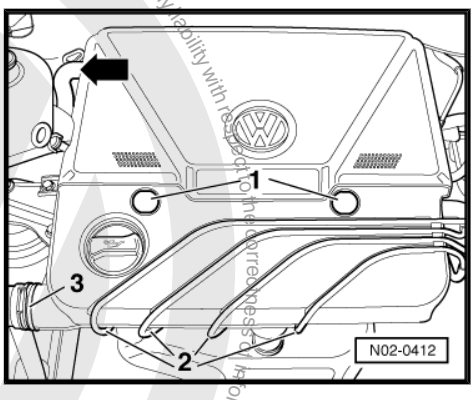

– Unscrew cross head bolts -1- and remove filter housing lower part.

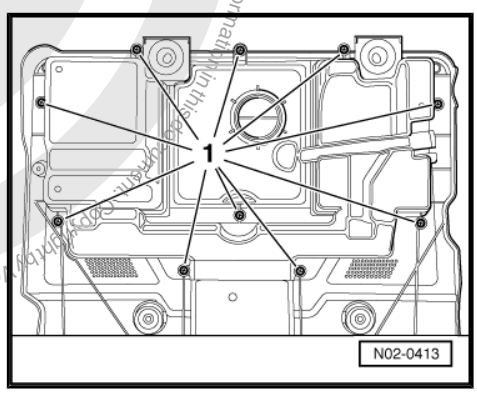

Note

- *The bolts must be loosened or tightened only by hand. When loosening or tightening the securing bolts it is only permitted to use a power screwdriver if:*
- *Speed of power screwdriver max. 200 rpm*
- *Specified torque: max. 3 Nm*

– Take out used filter elements -arrows-.

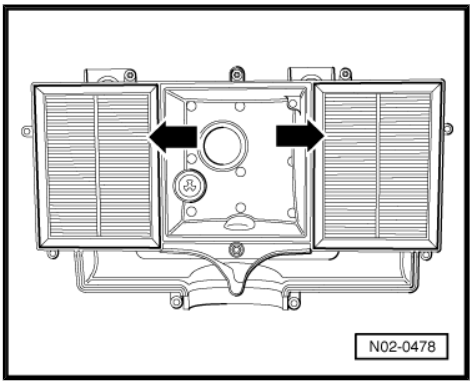

Note

Please observe disposal instructions!

Installing

– Clean filter housing and insert new filter elements.

– Insert filter housing lower part and tighten cross head bolts -1-.

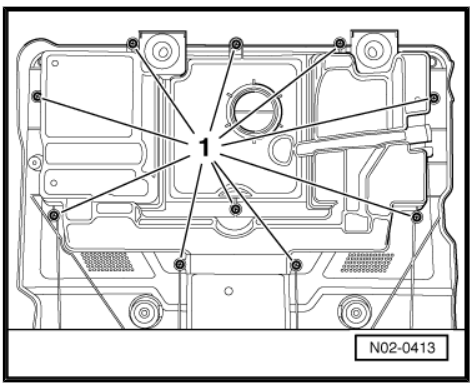

Note

- *The bolts must be loosened or tightened only by hand. When loosening or tightening the securing bolts it is only permitted to use a power screwdriver if:*
- *Speed of power screwdriver max. 200 rpm*
- *Specified torque: max. 3 Nm*

– Insert filter housing.

satelettronica

– Tighten securing bolts and fit caps -1-.
– Press ignition cables -2- into air filter housing.
– Fit hose and secure with hose clip -3-.
– Connect crankcase breather hose -arrow- to air filter housing.
– Connect exhaust gas recirculation hose to left side of air filter housing.

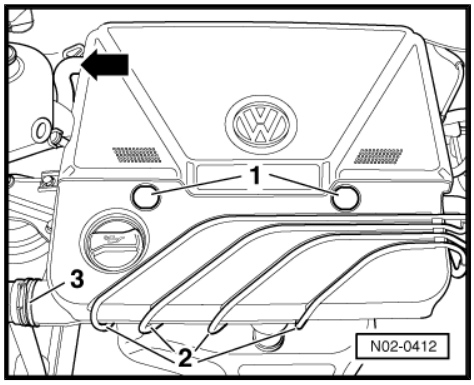

4.36.5 Engine codes APE, AQQ and AUA

Carry out following procedure:

Removing

– Remove hexagon socket head bolts -arrows- and take off engine cover.
– Pull crankcase breather hose off filter housing upper part.

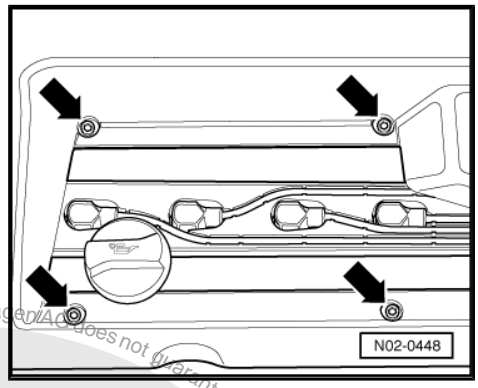

– Remove cross-head bolts -arrows-.

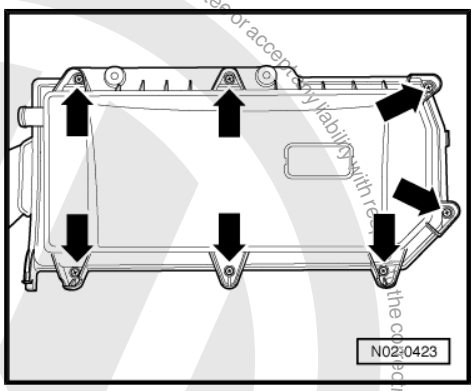

Note

- *The bolts must be loosened or tightened only by hand. When loosening or tightening the securing bolts it is only permitted to use a power screwdriver if:*
- *Speed of power screwdriver max. 200 rpm*
- *Specified torque: max. 3 Nm*

– Lift filter housing upper part and remove upwards.

– Take out used filter element -arrow-.

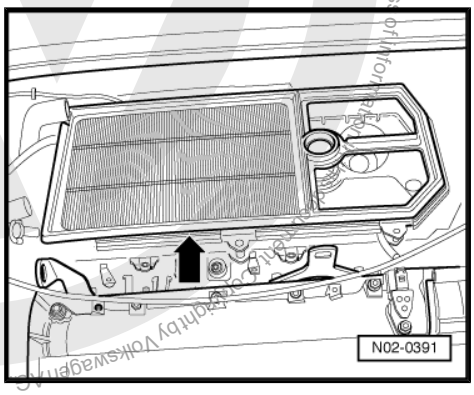

Note

Please observe disposal instructions!

Installing

– Clean filter housing and install new filter element.

Protected by copyright. Copying for private or commercial purposes, in part or in whole, is not permitted unless authorised by Volkswagen AG. Volkswagen AG does not guarantee or accept any liability with respect to the correctness of information.
satelettronica

– Screw in cross head bolts -arrows-.
– Fit crankcase breather hose onto filter housing upper part.

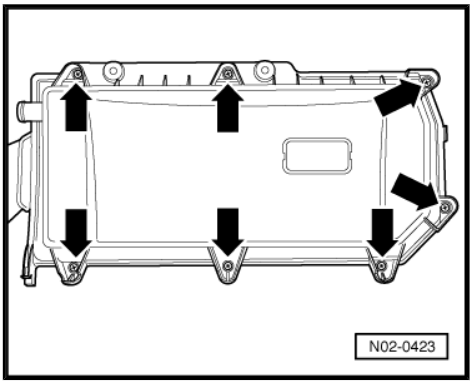

– Install engine cover and secure with hexagon socket head bolts -arrows-.

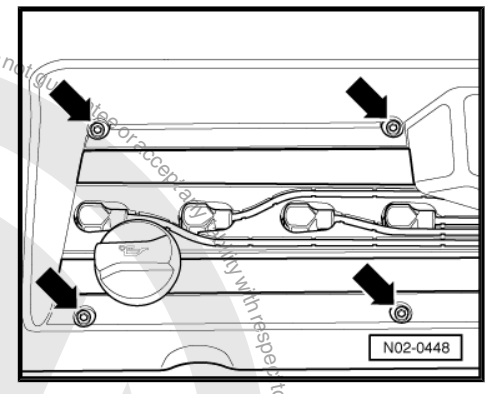

4.37 Fuel filter: renewing (diesel engine)

Note

- *Ensure that no diesel fuel contacts coolant hoses. Clean hoses immediately if soiled.*
- *Please observe disposal instructions!*

Carry out following procedure:

Removing

– Remove air filter housing if necessary.
– Pull off retaining clip -5-.
– Remove control valve with fuel lines connected.
– Pull fuel hoses off hose connections -1- and -2-.
– Loosen bolt on filter mounting and pull filter out upwards.

Installing new filter

– Fit new O-ring to seal regulating valve.

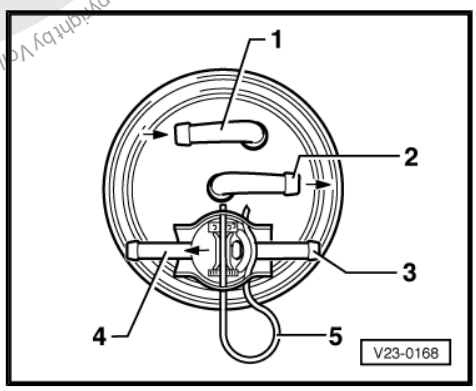

Note

Fuel through-flow direction is marked on the connections by arrows (do not interchange connections).

– Fill new filter with clean Diesel. This allows the engine to start quicker.
– Slide filter downwards through filter mounting and tighten.
– Install control valve with fuel lines connected.

Protected by copyright. Copying for private or commercial purposes, in part or in whole, is not permitted unless authorised by Volkswagen AG. Volkswagen AG does not guarantee or accept any liability with respect to the correctness of information in this document. Copyright by Volkswagen AG.
satelettronica

– Fit retaining clip -5-.

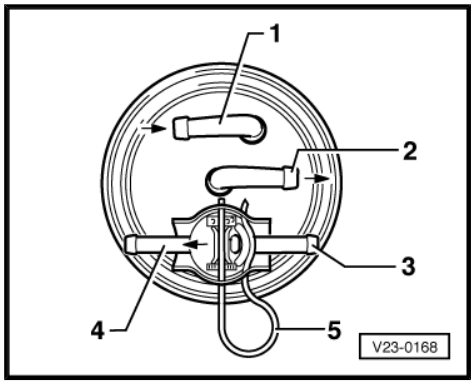

Note

Flow direction is marked by arrows (do not interchange connections).

– Push fuel hoses over hose connections -1- and-2- and secure hoses with hose clips.
– Install air cleaner housing if necessary.
– Start engine and check fuel system for leaks (visual check).
– Operate throttle several times and when engine is at idling speed fuel must flow bubble-free through the transparent hoses.

4.38 Fuel filter: draining water (diesel engine)

Note

- *Ensure that no diesel fuel contacts coolant hoses. Clean hoses immediately if soiled.*
- *Please observe disposal instructions!*

Carry out following procedure:

– Pull off retaining clip -5- and remove control valve with fuel lines connected.
– Fit hose onto water drain screw connection, open screw and drain approx. 0.1 l of fluid.
– Tighten water drain screw and remove hose.
– Fit new O-ring to seal regulating valve.
– Install control valve and fit retaining clip.
– Start engine and check fuel system for leaks (visual check).
– Operate throttle several times. Then fuel must flow bubble-free through the transparent line when engine is at idling speed.

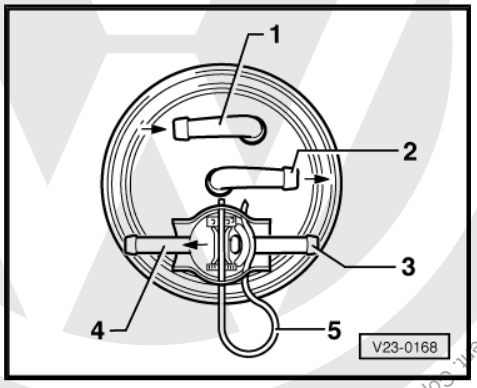

4.39 Automatic gearbox: checking ATF level

To check the oil level of the automatic gearbox, measure oil temperature. The oil temperature can be measured in two different ways:

- With fault reader - V.A.G 1551- ⇒ page 112

or using

- Vehicle diagnosis, testing and information system - VAS 5051B- or subsequent units ⇒ page 115

Check ATF level as follows:

4.39.1 Checking oil temperature of automatic gearbox using -V.A.G 1551-

Special tools and workshop equipment required

Protected by copyright. Copying for private or commercial purposes, in part or in whole, is not permitted unless authorised by Volkswagen AG. Volkswagen AG does not guarantee or accept any liability with respect to the correctness of information in this document. Copyright by Volkswagen AG.
satelettronica

♦ ATF filling unit - V.A.G 1924-

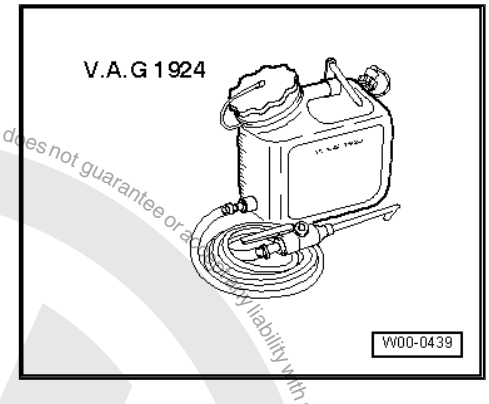

– Connect fault reader ⇒ page 20

Conditions for testing

- Gearbox not emergency running, ATF temperature not above approx. 30°C
- Vehicle standing on level ground
- Selector lever in “P” position
- Parking brake applied

Carry out following procedure:

Protected by copyright. Copying for private or commercial purposes, in part or in whole, is not permitted unless authorised by Volkswagen AG. Volkswagen AG does not guarantee or assume any liability with respect to the correctness of information in this document. Copyright by Volkswagen AG.

satelettronica

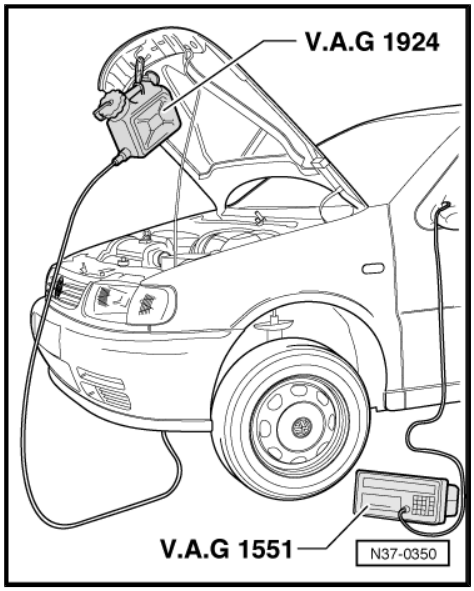

– Secure reservoir of ATF filling system - V.A.G 1924- to vehicle.

– Start engine and run it at idling speed.

On -V.A.G 1551- :

Indicated on display:

```
V.A.G - SELF DIAGNOSIS HELP
1 - Rapid data transfer
```

or

```
V.A.G - SELF DIAGNOSIS HELP
2 - Flash code output
```

Appears alternately

– Press button 1 to select “Rapid data transfer” mode.

Indicated on display:

```
Rapid data transfer HELP
Enter address word XX
```

– Press keys 0 and 2. “02” enters the address word “gearbox electronics”.

Indicated on display:

```
Rapid data transfer Q
02 Gearbox electronics
```

– Confirm entry with Q key.

– Raise vehicle.

– Place container under gearbox.

Indicated on display:

```
Rapid data transfer HELP
Select function XX
```

– Press keys 0 and 8. 08 selects the function “Read measured value block”.

Indicated on display:

```
Rapid data transfer Q
08 - Read measured value block
```

– Confirm entry with Q key.

Indicated on display:

```
Read measured value block
Enter display group number XXX
```

– Press keys 0, 0 and 5. (005 selects “Display group number 005”).

Indicated on display:

```
Read measured value block Q
Enter display group number 005
```

– Confirm entry with Q key.

Indicated on display:

```
Read measured value block 5 ->
30°C 0011011 0 900 rpm
```

The first display zone shows the ATF temperature.

– Bring ATF to test temperature.

Protected by copyright. Copying for private or commercial purposes, in part or in whole, is not permitted unless authorised by Volkswagen AG. Volkswagen AG does not guarantee or accept any liability with respect to the correctness of information in this document. Copyright by Volkswagen AG.

satelettronica

– Check oil level ⇒ page 117 .

4.39.2 Checking oil temperature of automatic gearbox using vehicle diagnosis, testing and information system - VAS 5051B- or subsequent units

Special tools and workshop equipment required

♦ ATF filling unit - V.A.G 1924-

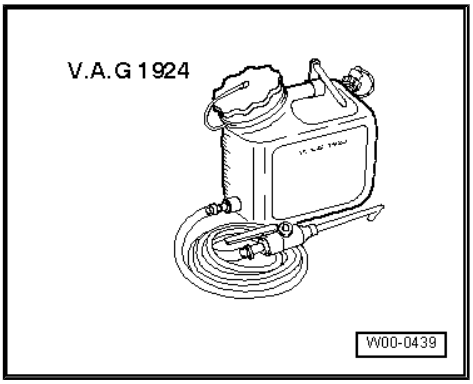

– Connect fault reader ⇒ page 20

Conditions for testing

- Gearbox not emergency running, ATF temperature not above approx. 30°C
- Vehicle standing on level ground
- Selector lever in “P” position
- Parking brake applied

Carry out following procedure:

– Secure reservoir of ATF filling system - V.A.G 1924- to vehicle.

– Start engine and run it at idling speed.

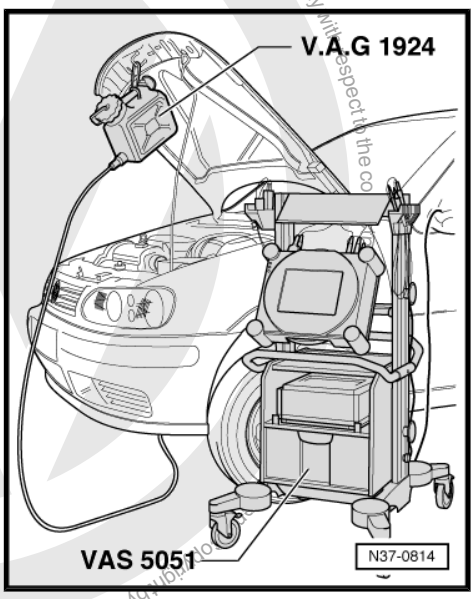

Protected by copyright. Copying for private or commercial purposes, in part or in whole, is not permitted unless authorised by Volkswagen AG. Volkswagen AG does not guarantee or accept any liability with respect to the co
satelettronica

Indicated on display:

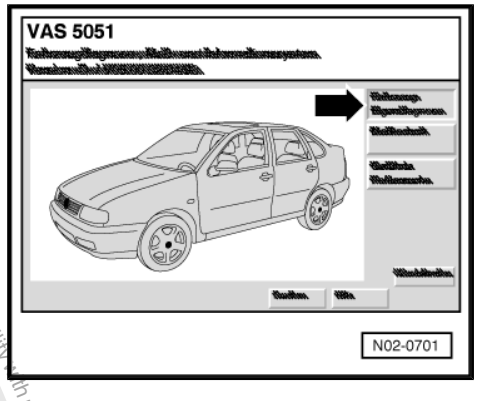

Selecting operating mode

– Press button for operating mode `Vehicle self-diagnosis` on display -arrow-.

Note

Observe actual operating instructions for fault reader, which are shown on display after selecting functions `Administration` *and* `Operating manual`.

Indicated on display:

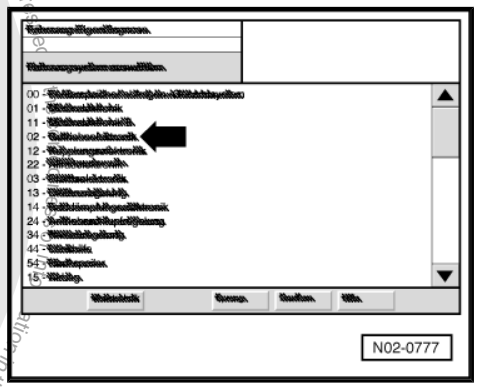

Selecting vehicle system

– Press `02 - Gearbox electronic` on display -arrow-.

Indicated on display:

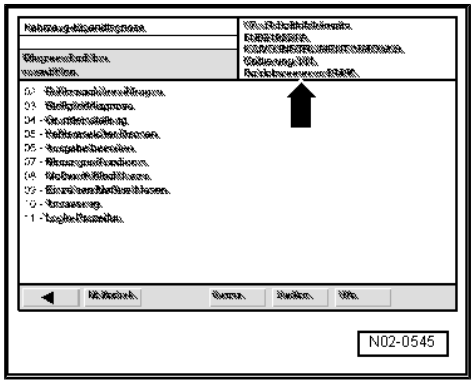

The control unit identification and coding are displayed -arrow-.

– Raising vehicle

– Place container under gearbox.

Indicated on display:

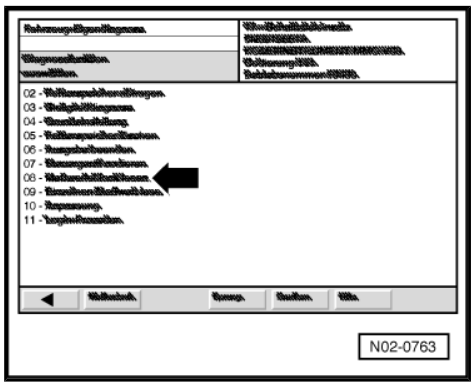

– Select `08 - Read measured value block` on display .-arrow-.

Protected by copyright. Copyright by Volkswagen AG.
Volkswagen AG does not guarantee or accept any liability with respect to the correctness of information in this document. Copyright by Volkswagen AG.
This document, in whole or in part, is not to be reproduced or made available for commercial purposes, in part or in whole, is not permitted unless authorised by Volkswagen AG.
satelettronica

Indicated on display:

– Press -arrow- 0; 0 and 5 on display number block (with 005 the “display group number 005” is selected).

– Confirm entry with Q button on display number block.

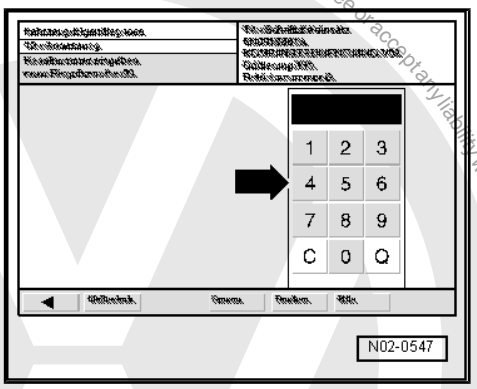

Indicated on display:

The display zone -1- shows the ATF temperature.

– Bring ATF to test temperature. Specification: 35 to 45°C

Continue with test only when temperature has been achieved.

– Check oil level ⇒ page 117 .

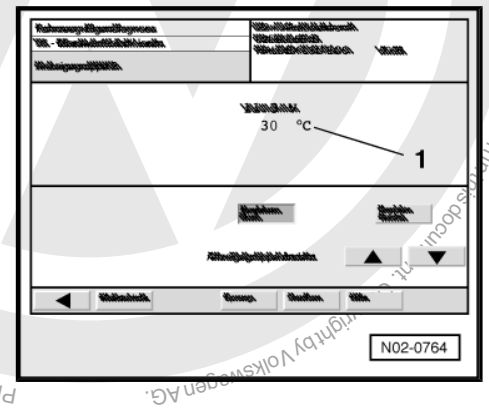

4.39.3 Checking oil level

Special tools and workshop equipment required

♦ Torque wrench - V.A.G 1331-

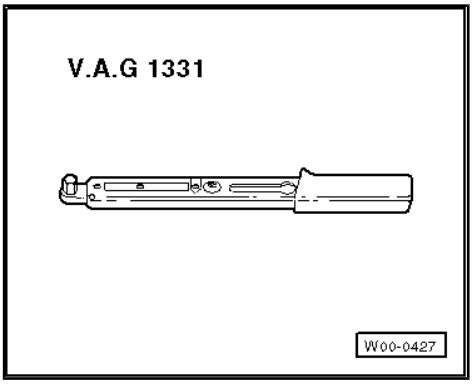

Test temperature 35°C to 45°C

– Unbolt ATF control plug -arrow 1- from oil sump.

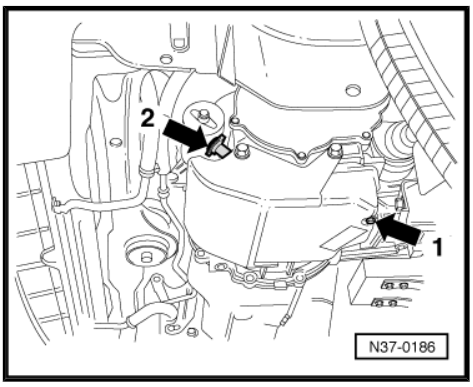

Protected by copyright. Copying for private or commercial purposes, in part or in whole, is not permitted unless authorised by Volkswagen AG. Volkswagen AG does not guarantee or accept any liability with respect to the correctness of information in this document. Copyright by Volkswagen AG.
satelettronica

The ATF present in the overflow pipe -arrow 2- runs out.

If ATF drips out of drilling

ATF need not be topped up.

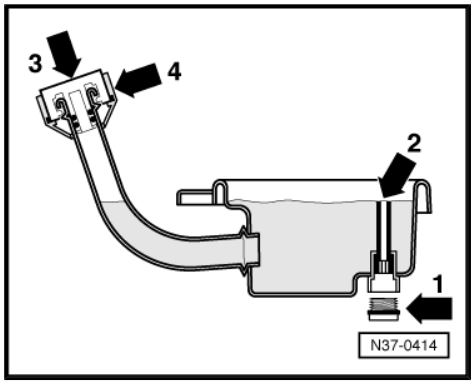

– If the ATF level is checked the seal -arrow- of the plug to check ATF must always be renewed.

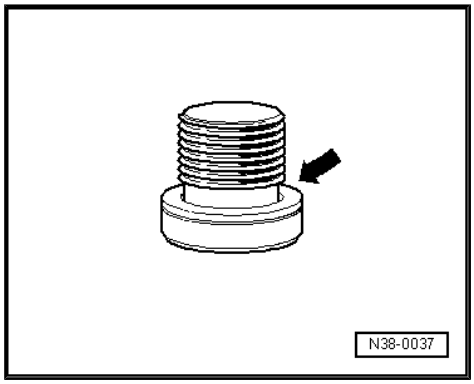

– Tighten plug -arrow 1- with new seal to 15 Nm. This completes the ATF check.
– End output on fault reader and separate the diagnostic connection.

If only the ATF present in the overflow pipe runs out of drilling: Top up ATF

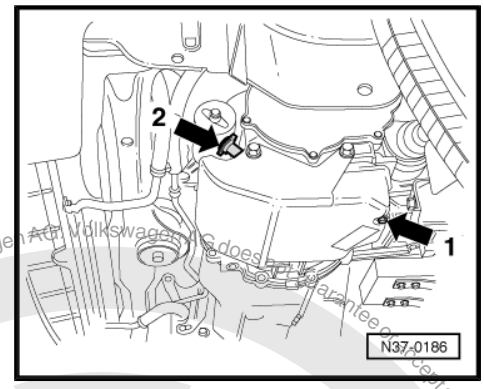

– Lever off plug securing cap -arrow- with a screwdriver. This destroys cap detent so always replace cap.

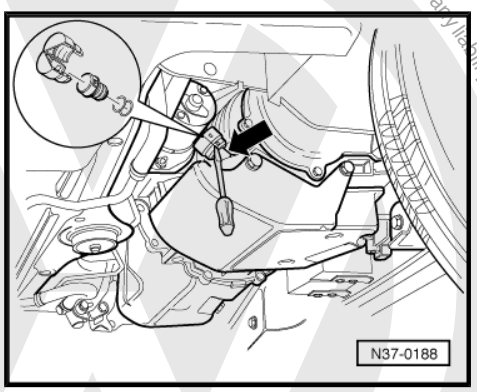

Note

A cap with a spring retainer is fitted on some gearboxes. This cap may be reused.

– Remove plug from filler pipe.

Protected by copyright. Copying for private or commercial purposes, in part or in whole, is not permitted unless authorised by Volkswagen AG. Volkswagen AG does not guarantee or accept any liability with respect to the correctness of information in this document. Copyright by Volkswagen AG.
satelettronica

– Fill with ATF using -V.A.G 1924- , until ATF runs out of level hole -arrow-.

Only top up with VW ATF:

Container size 0.5 l -G 052 162 A1-

Container size 1.0 l -G 052 162 A2-

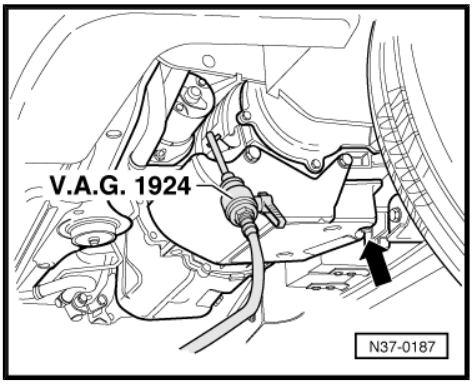

Note

An insufficient ATF filling as well as excessive filling affects the function of the gearbox.

– Tighten plug with new seal -arrow 1- to 15 Nm.

– Fit sealing plug onto filler pipe until locking device engages, or

– Fit sealing plug on filler pipe and secure with a new cap -arrow 2-.

– Engage cap.

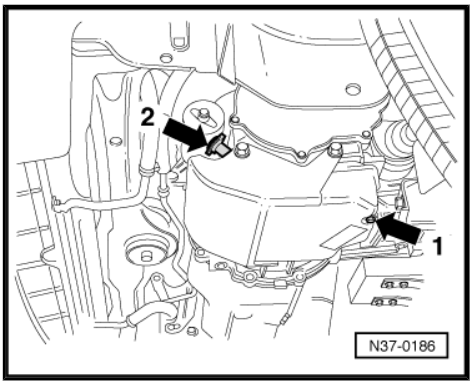

Note

- *Always renew cap without clip. The cap secures the plug.*
- *A cap with a spring retainer is fitted on some gearboxes. This cap may be reused.*

– End output on fault reader and separate the diagnostic connection.

4.40 Power assisted steering: checking fluid level

Carry out following procedure:

4.40.1 Oil in cold condition:

– Do not start engine but bring front wheels to straight-ahead position.

– Unscrew cap -1- with dipstick from oil reservoir.

– Wipe off dipstick using a clean cloth.

– Screw filler cap on hand tight and unscrew again.

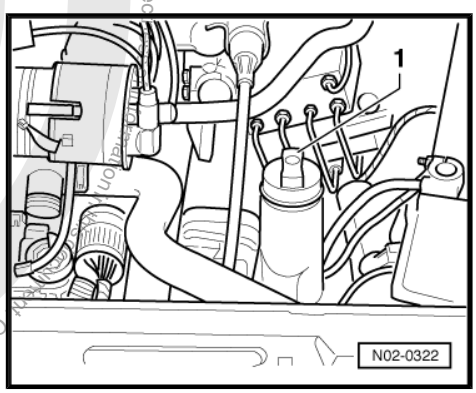

Note

The cap must be fully screwed on in order to obtain an accurate fluid level reading.

Protected by copyright. Copyright by Volkswagen AG.
Copyright by Volkswagen AG. Volkswagen AG does not guarantee or accept any liability with respect to the correc
Protected by copyright. Copyright. Copyright. Copyright by Volkswagen AG.
satelettronica

– Check fluid level: The fluid level must be in area of MIN. marking (up to 2 mm above or below marking).

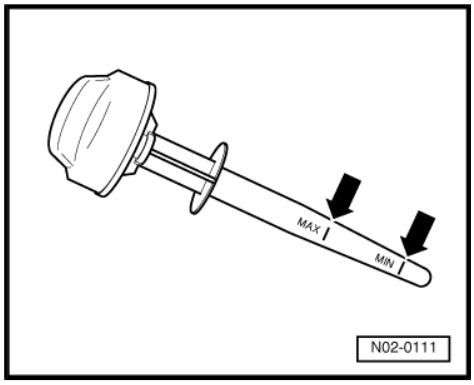

Note

- *If fluid level is above specified range, fluid must be extracted.*
- *If fluid level is below above-mentioned area, hydraulic system must be checked for leaks (repair measure). It is not sufficient just to top up with fluid. If the hydraulic system is not leaking, top up with oil -G 002 000- .*

– Screw cap on hand tight.

4.40.2 Fluid at operating temperature (above approx. 50°C)

– Do not start engine but bring front wheels to straight-ahead position.

– Unscrew cap -1- with dipstick from oil reservoir.

– Wipe off dipstick using a clean cloth.

– Screw filler cap on hand tight and unscrew again.

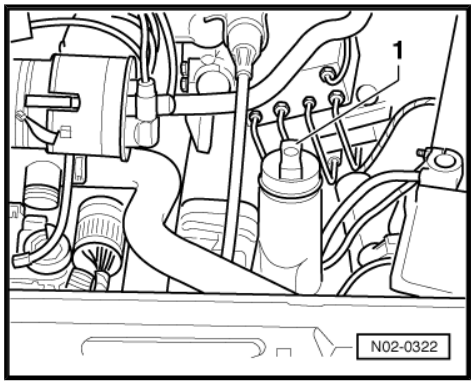

Note

The cap must be fully screwed on in order to obtain an accurate fluid level reading.

– Check oil level: The oil level must be between MIN. and MAX. marking -arrows-.

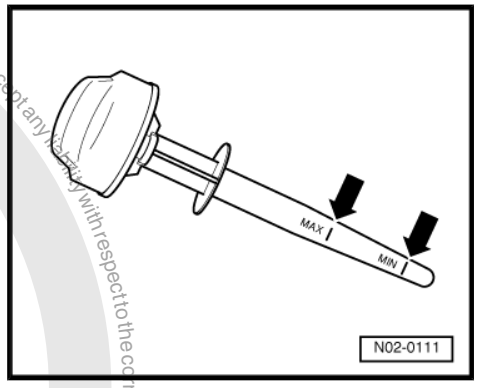

Note

- *If fluid level is above MAX. marking, fluid must be extracted.*
- *If fluid level is below MIN. marking, then hydraulic system must be checked for leaks (repair measure). It is not sufficient just to top up with fluid. If the hydraulic system is not leaking, top up with oil -G 002 000- .*

– Screw cap on hand tight.

4.41 Changing brake fluid

Special tools and workshop equipment required

Protected by copyright. Copying for private or commercial purposes, in part or in whole is not permitted unless authorised by Volkswagen AG. Volkswagen AG does not guarantee or accept any liability with respect to the correctness of information in this document. Copyright by Volkswagen AG.

satelettronica

- Brake pedal depressor - V.A.G 1869/2-

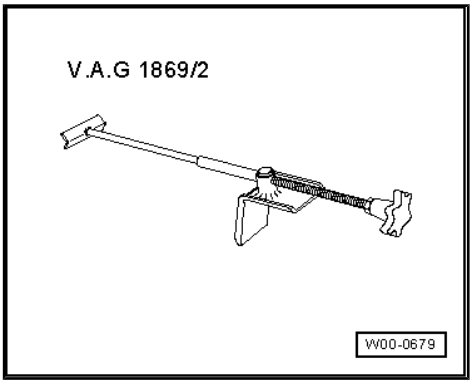

- Brake filling and bleeding equipment - VAS 5234-

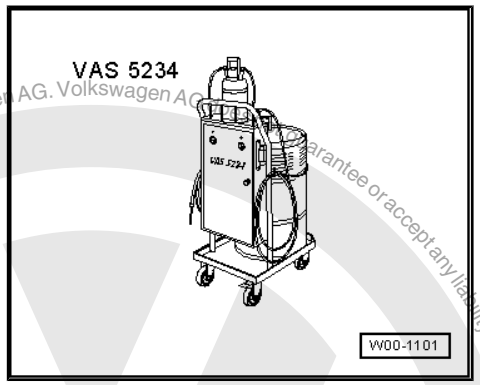

or

- Brake filling and bleeding equipment - V.A.G 1869-

or

- Brake filling and bleeding unit - V.A.G 1869- with set - V.A.G 1869/4-

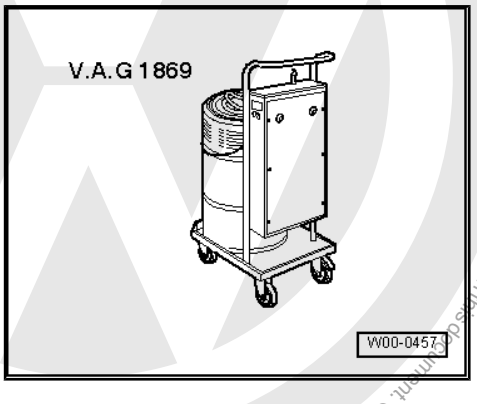

Permissible brake fluid specification

- Brake fluid conforming to US standard FMVSS 116 DOT 4 (previous brake fluid)
- Brake fluid conforming to VW standard, VW 501 14 (new brake fluid).

WARNING

- *Never allow brake fluid to come into contact with fluids that contain mineral oils (e.g. oil, petrol, cleaning agents). Mineral oils damage the seals and boots in the brake system.*
- *Brake fluid is poisonous. In addition, due to its corrosive nature, it must not come into contact with paint.*
- *Brake fluid is hygroscopic, which means it absorbs moisture from the ambient air and should therefore always be stored in air-tight containers.*
- *Rinse off spilled brake fluid using plenty of water.*
- *Observe relevant disposal regulations.*

Carry out following procedure:

Observe operating instruction for -VAS 5234- or -V.A.G 1869- !

– Unbolt cap from brake fluid reservoir.

Protected by copyright. Copying for private or commercial purposes, in part or in whole, is not permitted unless authorised by Volkswagen AG. Volkswagen AG does not guarantee or accept any liability with respect to the correctness of information in this document. Copyright by Volkswagen AG.
satelettronica

– Extract as much brake fluid as possible using suction hose from -VAS 5234- -1- or from -V.A.G 1869- or using a suction bottle if strainer is built in.

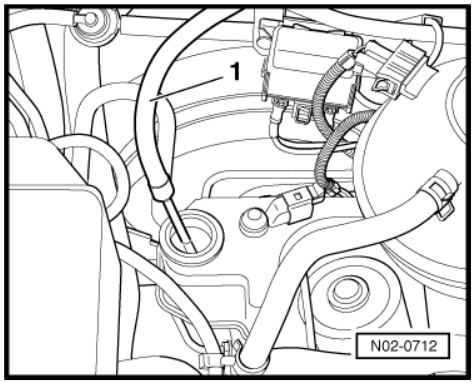

WARNING

Do not reuse extracted (used) brake fluid.

– Fit brake pedal actuator - V.A.G 1869/2- between driver seat and brake pedal and pretension.

– Connect adapter -1- on brake fluid reservoir.

– Connect filling hose from -VAS 5234- or -V.A.G 1869- to adapter.

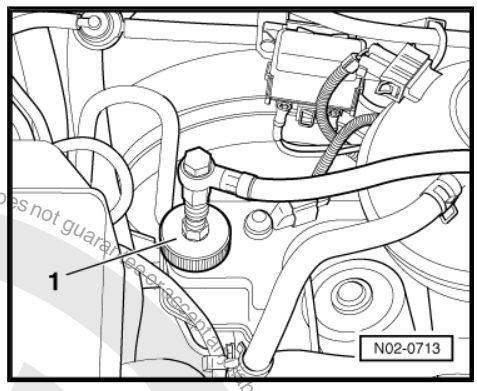

Note

On vehicles with 5-speed manual gearbox 02A the brake fluid of the hydraulic clutch mechanism must also be changed. Vehicles with a 5-speed manual gearbox 085 and 4- and 5-speed manual gearbox 020 have no hydraulic clutch mechanism.

Vehicles with 5-speed manual gearbox 02A

– Pull off cover cap -arrow-, connect collector bottle bleed hose to clutch slave cylinder, open bleed screw and allow approx. 0.1 l to flow out. Close bleed screw and fit cover cap -arrow-.

– Operate clutch pedal several times.

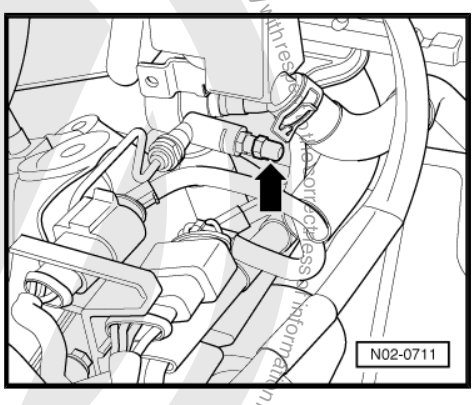

Continued for all vehicles

– Remove caps from bleeder screws.

– Push collector bottle bleed hose -1- onto rear bleeder screw [7], open bleeder screw and let appropriate quantity of brake fluid (see following table) run out. Close bleed screw.

7) Start at rear right of left-hand drive vehicles and at rear left of right-hand drive vehicles.

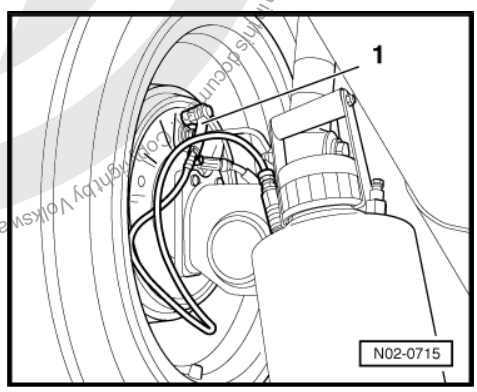

Repeat procedure on other side of vehicle at rear.

Protected by copyright. Copying for private or commercial purposes, in part or in whole, is not permitted unless authorised by Volkswagen AG. Volkswagen AG does not guarantee or accept any liability with respect to the correctness and completeness of this document. Translation rights reserved by Volkswagen AG.
satelettronica

– Push collector bottle bleeder hose -1- onto front bleeder screw [8], open bleeder screw and let appropriate quantity of brake fluid (see table) run out. Close bleed screw.

8) Start at front right of left-hand drive vehicles and at front left of right-hand drive vehicles.

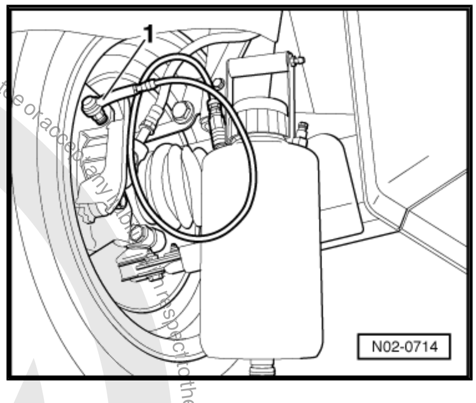

Repeat procedure on other side of vehicle at front.

Sequence: Wheel brake cylinders, brake calipers	Brake fluid quantity which must flow out of wheel brake cylinders or brake calipers:
Rear right	400 to 500 cm^3
Rear left	400 to 500 cm^3
Front right	400 to 500 cm^3
Front left	400 to 500 cm^3

Total quantity: approx. 2 litre

– Fit cover caps on bleeder screws.

– Move fill lever of -VAS 5234- or -V.A.G 1869- to position -B- (see operating instructions).

– Take filler hose off adapter.

– Unscrew adapter from brake fluid reservoir.

– Screw in cap of brake fluid reservoir.

– Remove brake pedal depressor.

– Check pedal pressure and brake pedal free play. Free play: max. $^1/_3$ of pedal travel.

4.42 Brake fluid level (dependent upon brake pad/lining wear): checking

Permissible brake fluid specification

♦ Brake fluid conforming to US standard FMVSS 116 DOT 4 (previous brake fluid)

♦ Brake fluid conforming to VW standard, VW 501 14 (new brake fluid).

Protected by copyright. Copying for private or commercial purposes, in part or in whole, is not permitted unless authorised by Volkswagen AG. Volkswagen AG does not guarantee or accept any liability with respect to the correctness of information in this document. Copyright by Volkswagen AG.
sateletronica

WARNING

- *Never allow brake fluid to come into contact with fluids that contain mineral oils (e.g. oil, petrol, cleaning agents). Mineral oils damage the seals and boots in the brake system.*
- *Brake fluid is poisonous. In addition, due to its corrosive nature, it must not come into contact with paint.*
- *Brake fluid is hygroscopic, which means it absorbs moisture from the ambient air and should therefore always be stored in air-tight containers.*
- *Rinse off spilled brake fluid using plenty of water.*
- *Observe relevant disposal regulations.*

Please note the following:

Delivery inspection

At delivery inspection the fluid level must be at MAX. marking.

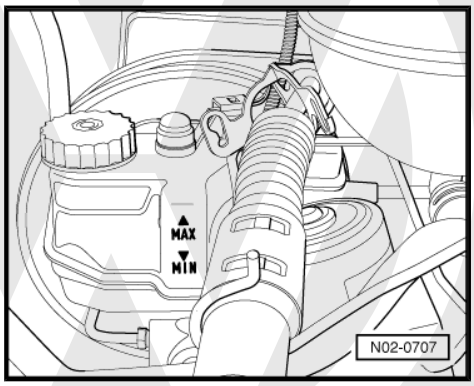

Note

To prevent that brake fluid flows out of reservoir, the MAX marking must not be exceeded.

Inspection service

- The fluid level must always be judged in conjunction with lining/pad wear. When vehicle is in use, fluid level tends to drop slightly due to lining/pad wear and automatic adjustment.
- When fluid level is at MIN. marking or just above, fluid should not be topped up if linings are almost at wear limit.
- If linings/pads are new or well within wear limit, then fluid level must be between MIN. and MAX. markings.
- If fluid level is below MIN. marking, the brake system should be checked before fluid is added. (repair measure).

4.43 Battery: checking battery terminal clamps for secure seating

Special tools and workshop equipment required

- Torque wrench - V.A.G 1331- (5-50 Nm)

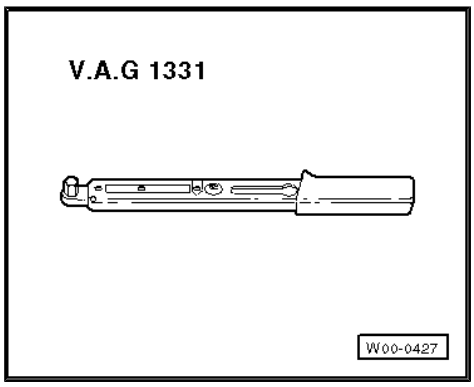

Protected by copyright. Copyright by Volkswagen AG.
Copying for private or commercial purposes, in part or in whole, is not permitted unless authorised by Volkswagen AG. Volkswagen AG does not guarantee or accept any liability with respect to the correctness of information in this document.
satelettronica

Note

A securely seated battery clamp ensures trouble free function and long service life of the battery.

Carry out following procedure:

– Open heat protective jacket -arrow- (if part of original equipment).

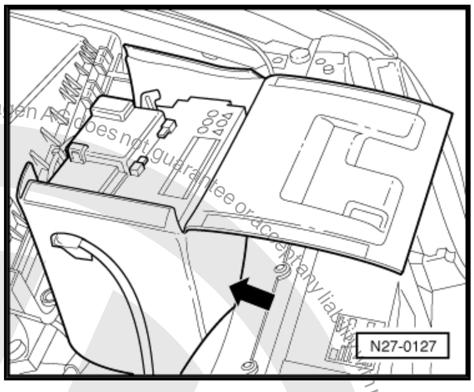

– Press lugs -arrows- together and open cover out forwards.

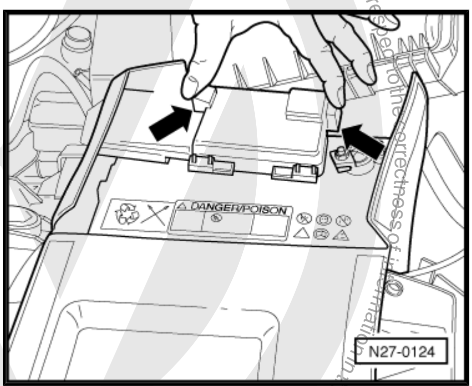

– Check if battery clamps -4- and -5- are seated securely on battery terminals by moving battery positive cable -2- and battery negative cable -3- back and forth.

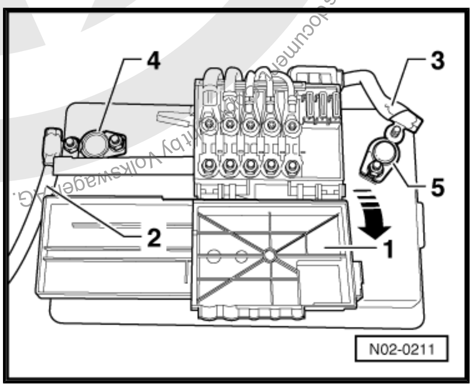

WARNING

If the battery clamp is not seated securely on the positive terminal, first disconnect battery clamp from battery negative terminal to prevent possible accidents.

If the battery terminal clamp on positive terminal is not seated securely

– Disconnect battery terminal clamp -5- on battery negative terminal first.

– Tighten battery clamp on battery positive terminal to 5 Nm.

– Reconnect battery clamp -5- to battery negative terminal and tighten to 5 Nm.

If the battery clamp on negative terminal is not seated securely

– Tighten battery clamp -5- on battery negative terminal to 5 Nm.

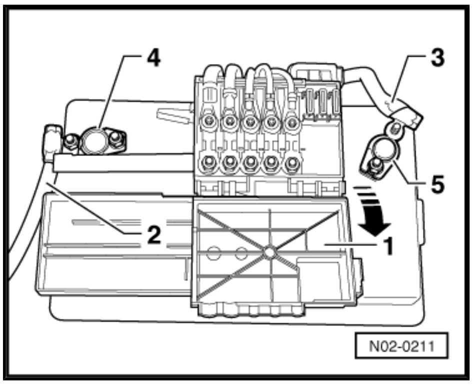

Protected by copyright. Copying for private or commercial purposes, in part or in whole, is not permitted unless authorised by Volkswagen AG. Volkswagen AG does not guarantee or accept any liability with respect to the correctness of information in this document. Copyright by Volkswagen AG.
satelettronica

4.44 Battery: checking

Procedure: »Electrical system« ⇒ Electrical system; Rep. gr. 27 ;
Checking battery »Checking battery«

4.45 Idling speed: checking

Diesel engine with engine code 1Y

Special tools and workshop equipment required

- Ignition tester - V.A.G 1767 -

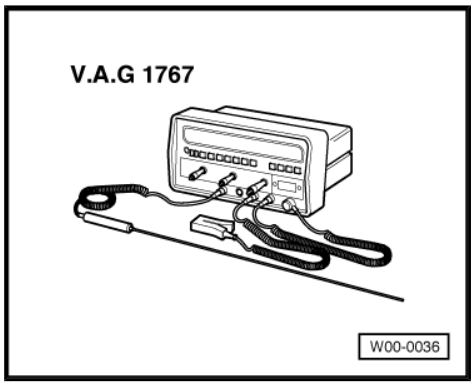

or

- Ignition tester - V.A.G 1367 -

Note

Test and adjustment conditions and specifications ⇒ Data sheets for exhaust emissions test

Carry out following procedure:

– Connect ignition tester - V.A.G 1767- or ignition tester - V.A.G 1367 - .
– Start engine and run it at idling speed.
– Check idling speed, if necessary adjust by turning the idling speed adjustment screw -1-.

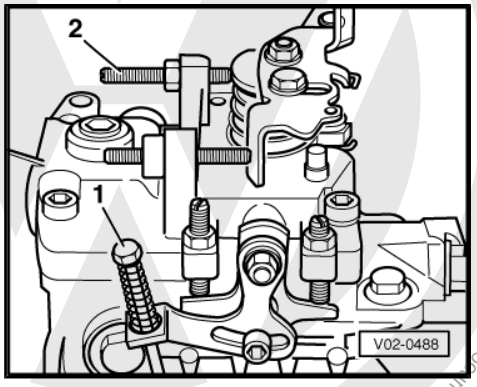

4.46 Headlight adjustment: checking

Special tools and workshop equipment required

Protected by copyright. Copying for private or commercial purposes, in part or in whole, is not permitted unless authorised by Volkswagen AG. Volkswagen AG does not guarantee or accept any liability with respect to the correctness of information in this document. Copyright by Volkswagen AG.
satelettronica

- Headlight adjustment unit - VAS 5047-

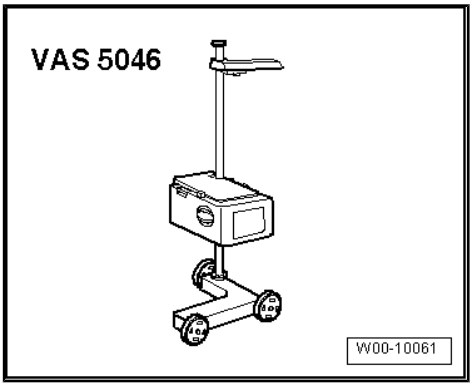

or

- Headlight adjustment unit - VAS 5046-

The following test and adjustment instructions are applicable in all countries. However, national guidelines and regulations of the respective country are to be followed.

Test and adjustment conditions

- Tyre pressures OK.
- Lenses must not be damaged or dirty
- Reflectors and bulbs OK.
- Vehicle must be loaded.

Loading: with one person or 75 kg on the driver seat and the vehicle otherwise unloaded (unladen weight).

The unladen weight is the weight of vehicle ready for operation with a full fuel tank (at least 90%) including weight of all equipment usually carried (e.g. spare wheel, tools, jack, fire extinguisher etc.).

If the fuel tank is not at least 90% full, then load as follows:

– Read off fuel level in fuel tank on fuel gauge -arrow-. Determine additional weight from following table and place weight in luggage compartment.

Fuel gauge table

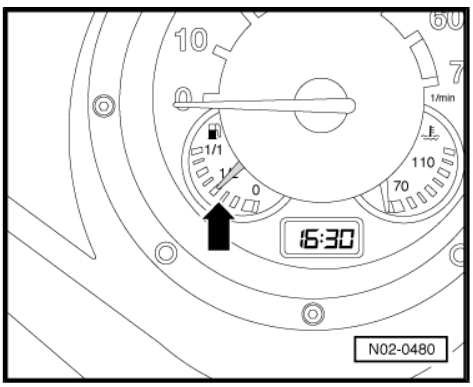

Fuel gauge reading	Additional weight in kg
1/4	20
1/2	15
3/4	5
Full	0

Example:

When the fuel tank is half full an additional weight of 15 kg must be placed in the luggage compartment.

Copyright by Volkswagen AG. Volkswagen AG does not guarantee or accept any liability with respect to the correctness of information in this copy. Copyright. Copying for private or commercial purposes, in part or in whole, is not permitted unless authorised by Volkswagen AG.
satelettronica

Protected by copyright. Copyright by Volkswagen AG. Volkswagen AG does not guarantee or accept any liability with respect to the correctness of information in this document. Copying for private or commercial purposes, in part or in whole, is not permitted unless authorised by Volkswagen AG.

Note

The additional weight is best produced using fuel canisters filled with water (a 5 litre fuel canister filled with water weighs approx. 5 kg).

The vehicle must be rolled forward or backward several metres or front and rear springs must be bounced fully several times so that springs settle.

- Vehicle and headlight adjuster must be on a level surface ⇒ Headlight adjuster operating instructions
- Vehicle and headlight adjuster must be aligned.
- Inclination must be set.

Note

- *The headlights must be set according to the inclination in "%" -arrow C- stamped on the headlight. Percentage indicated on sticker is based on a projection distance of 10 metres. For example: inclination of 1.2% converts to approx. 12 cm.*
- *If the vehicle is equipped with separate dipped and main beam, adjust main beam additionally. When adjusting main beam ensure that the adjustment unit is set to 0%.*

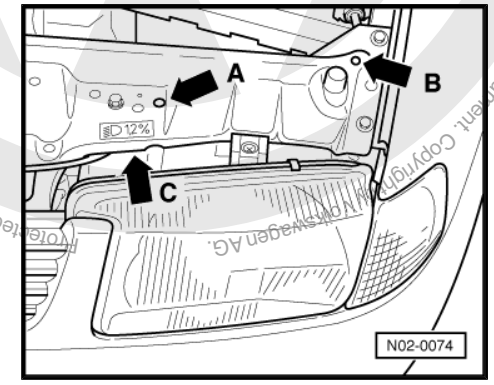

Fog light inclination: 20 cm

- On vehicles with headlight range control the thumb wheel on the dash panel must be in basic setting (-).

4.46.1 Checking headlight adjustment (without 15° setting line)

Headlights

Please check the following:

– Whether, with the dipped beam switched on, the horizontal light-dark border contacts the dividing line -1- of the test area and

– Whether the breaking point -2- between the horizontal part of the bright/dark boundary on the left and the rising part on the right lies on the vertical line of the central point -3-. The bright core of the light beam must be to the right of the vertical line.

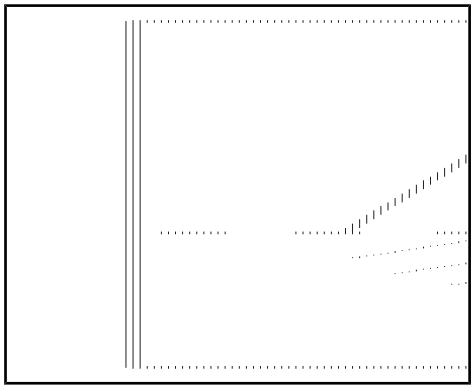

satelettronica

Note

- *To simplify finding the breaking point -2-, cover and uncover left (from driver perspective) half of the headlight a few times. Then check dipped beam again.*
- *After correct adjustment of dipped beams, the centre point of the main beam must lie on the centre mark -3-.*
- *To avoid incorrect settings, ignore the 15° setting line.*

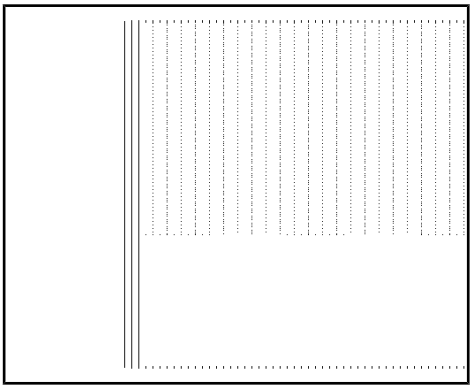

Fog lights

– Check whether the upper bright/dark boundary touches the setting line and runs horizontally over the entire width of the test screen.

Other additional lights

Additionally retrofitted lights of other systems must be checked and set according to valid guidelines.

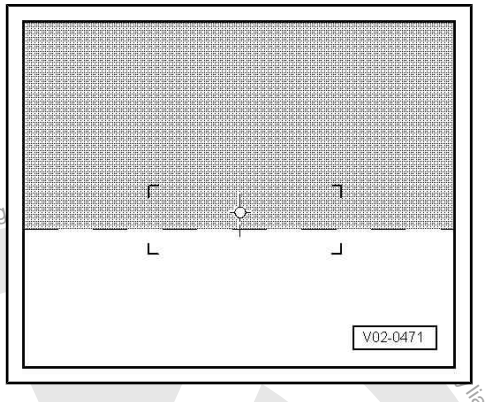

4.46.2 Adjusting headlights

Note

When the dipped beam is set the main beams are set at the same time.

Left headlight

Both adjustment screws on right-hand headlight are a mirror image.

-A- Lateral adjustment

-B- Height adjustment

– Adjust headlights, through holes -A- and -B-, using a suitable cross-head screwdriver.

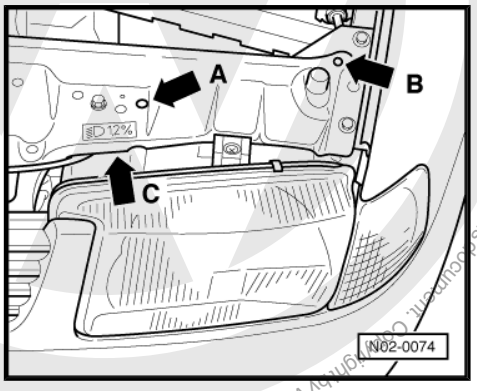

Note

Please check also that the reflectors in both headlights move evenly when operating the headlight range control.

Protected by copyright. Copying for private or commercial purposes, in part or in whole, is not permitted unless authorised by Volkswagen AG.
Copyright by Volkswagen AG.
liability with respect to the correctness of information in this document.
satelitronica

Volkswagen AG. Volkswagen AG does not guarantee or accept any liability with respect to the correctness of information in this document. Copyright by Volkswagen AG. Protected by copyright. Copying for private or commercial purposes, in part or in whole, is not permitted unless authorised by Volkswagen AG.

Left fog light

– To reduce the beam range turn adjustment screw -arrow- to the right. There is no provision for lateral adjustment.

Location of adjustment screw on right-hand headlight is a mirror image.

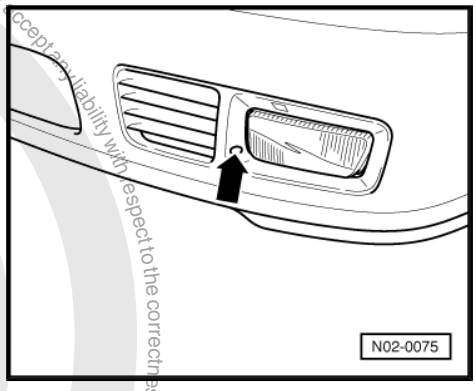

Other additional lights

Additionally retrofitted lights of other systems must be checked and set according to valid guidelines.

4.47 Carry out road test

Which of the following can be checked depends on vehicle equipment and local conditions (urban/country).

Check the following during a road test:

– Engine: output, misfiring, idling speed, acceleration

– Clutch: pulling away, pedal pressure, odours

– Gear selection: ease of operation, stick position

– Automatic gearbox: selector lever position, shift lock/ignition key removal lock, shift behaviour, dash panel insert display.

– Foot brake and handbrake: function, free travel and effectiveness, pulling to one side, juddering, squeal

– ABS function: Pulsing must be felt at the brake pedal during ABS-regulated braking.

– Steering: function, steering free clearance, steering wheel centred when vehicle is travelling straight ahead

– Tilting roof: function

– Radio/radio navigation system: function, reception, GALA, interference noise

– Multi-function indicator (MFI): functions

– Air conditioning system: function

– Vehicle: pulling to one side when travelling straight-ahead (level road)

– Imbalance: wheels, drive shafts, propshaft

– Wheel bearings: noises

– Engine: hot starting behaviour

satelettronica

5 Exhaust emissions test

Note

- *Please observe the country specific legal regulations.*
- *The exhaust emissions test described below has been created according to the legal regulations valid in Germany.*
- *In Germany the following is legally prescribed:*
- *Vehicles with diesel engine which are registered from 01.01.2004 must be equipped with EOBD.*
- *Vehicles with petrol engine which are registered from 01.01.2001 must be equipped with EOBD.*

- Procedures for vehicles with petrol engine without OBD

With fault reader - V.A.G. 1551- ⇒ page 131
With complete emissions testing station - VAS 6300- ⇒ page 142

- Procedures for vehicles with petrol engine and OBD ⇒ page 151
- Procedures for vehicles with diesel engine without OBD ⇒ page 153

5.1 Exhaust emissions test for vehicles with petrol engine without OBD with -Fehlerauslesegerät V.A.G. 1551-

Procedure according to engine codes

ADZ, AEX, AKV, ANX, APQ and 1F	⇒ page 131
AEE, AFT and ALM	⇒ page 135
AEH, AKK, AKL, ANW, APE, APF, AQQ, AUA, AUD and AUR	⇒ page 139

5.1.1 Engine codes ADZ, AEX, AKV, ANX, APQ and 1F

Special tools and workshop equipment required

- Fault reader - V.A.G 1551-

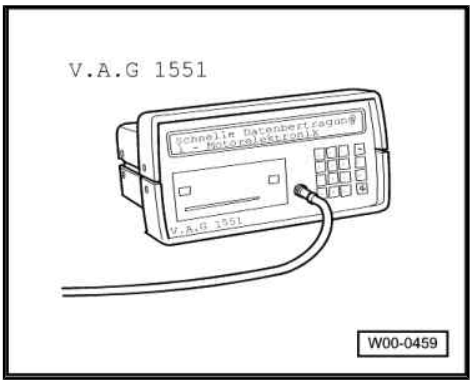

Protected by copyright. Copying for private or commercial purposes, in part or in whole is not permitted unless authorised by Volkswagen AG. Volkswagen AG does not guarantee or accept any liability with respect to the correctness of information in this document. Copyright by Volkswagen AG.
satelettronica

- Adapter cable - V.A.G 1551/3 A-

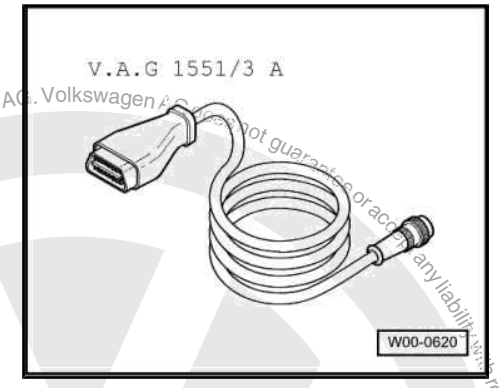

- Ignition tester - V.A.G 1767 -

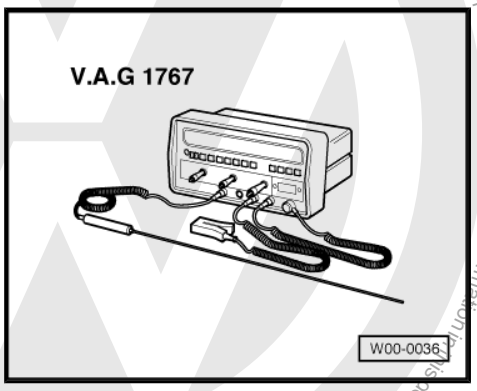

or

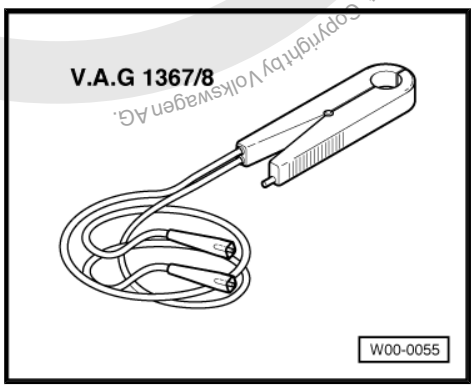

Protected by copyright. Copyright for private or commercial purposes, in part or in whole, is not permitted unless authorised by Volkswagen AG. Volkswagen AG does not guarantee or accept any liability with respect to the correctness of information in this document. Copyright by Volkswagen AG.

satelettronica

- Ignition tester - V.A.G 1367 -
- Trigger clamp - V.A.G 1367/8-
- 4-component exhaust emission tester - V.A.G 1787-

or

- 4-component exhaust emission tester - V.A.G 1788-
- ⇒ Data sheets for exhaust emissions test

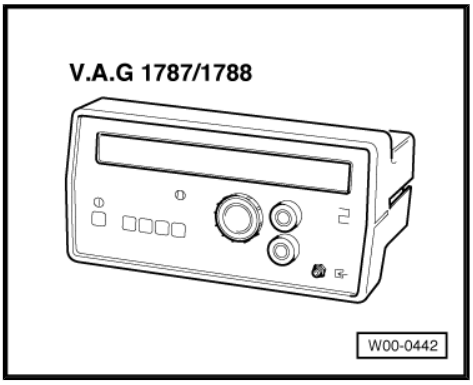

Procedure

Note

- *All test conditions and data required for emissions test ⇒ Data sheets for exhaust emissions test*
- *Faults identified (engine electronics) when fault memory is read must be rectified and the fault memory then cleared.*
- *To prevent injuries to personnel and/or damage to ignition and injection system, the ignition system wiring (including high voltage wiring) should be connected and disconnected only with ignition switched off.*

Carrying out visual check of components influencing emissions

⇒ Data sheets for exhaust emissions test

– Performing visual check for:

- Installation
- Completeness
- Leakage
- Damage

Note

Faults found are to be rectified.

Connecting test units

– Apply handbrake.

– Automatic gearbox: Move selector lever to position “P” or “N”.

– Manual gearbox: gear lever in neutral.

Connect -V.A.G 1551- with ignition switched off ⇒ page 20

Protected by copyright. Copying for private or commercial purposes, in part or in whole is not permitted unless authorised by Volkswagen AG. Volkswagen AG does not guarantee or accept any liability with respect to the correctness of information in this document. Copyright by Volkswagen AG.

satelettronica

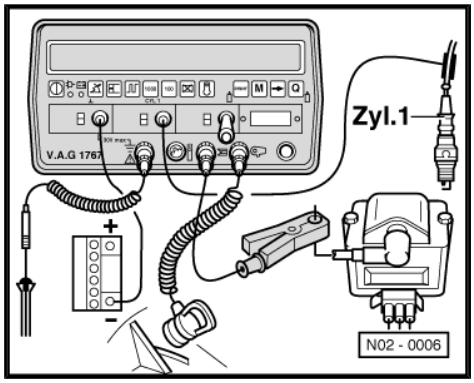

– Connect ignition tester - V.A.G 1367- or ignition tester - V.A.G 1367/8- using trigger clamp - V.A.G 1767- with ignition switched off.

– Connect CO-tester - V.A.G 1363 A- or: 4-component exhaust emission tester - V.A.G 1787- or: 4-component exhaust emission tester - V.A.G 1788 (D)- to sampling pipe.

Carry out following procedure:

– Start engine and run it at idling speed.

– Check idling speed and CO content (not adjustable).

If actual figures deviate from specifications: Carry out repair measures!

On -V.A.G 1551- :

Indicated on display:

```
V.A.G - SELF DIAGNOSIS HELP
1 - Rapid data transfer
```

or

```
V.A.G - SELF DIAGNOSIS HELP
2 - Flash code output
```

Appears alternately

– Press button 1 to select “Rapid data transfer” mode.

Indicated on display:

```
Rapid data transfer HELP
Enter address word XX
```

– Press buttons 0 and 1 for address word “Engine electronics” and confirm entry with Q button.

– Press → button.

Indicated on display:

```
Rapid data transfer HELP
Select function XX
```

– Press buttons 0 and 4 for function “Initiate basic setting” and confirm entry with Q button.

Indicated on display:

```
Basic setting HELP
Enter display group number XXX
```

– Press buttons 0; 0 and 1 for “Display group number 001” and confirm entry with Q button.

– Check ignition timing, if necessary adjust by turning distributor.

Protected by copyright. Copying for private or commercial purposes, in part or in whole, is not permitted unless authorised by Volkswagen AG. Volkswagen AG does not guarantee or accept any liability with respect to the correctness of information in this document. Copyright by Volkswagen AG.

satelettronica

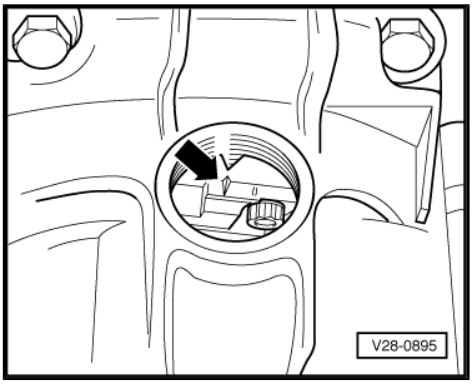

Note

- *The ignition timing is displayed directly on ignition tester with TDC sender.*
- *With strobe lamp the strobe must be directed at ignition timing mark -arrow-.*

On -V.A.G 1551- :

– Press ⏎ button.

Indicated on display:

```
Rapid data transfer HELP
Select function XX
```

– Press buttons 0 and 6 for function “End data transfer” and confirm entry with Q button.

Note

- *Reconnect all hoses and connections that have been disconnected or separated for checking and adjusting purposes.*
- *Operate assemblies e.g. power assisted steering, automatic gearbox, air conditioning system and check that the engine operates smoothly under these load conditions.*

5.1.2 Engine codes AEE, AFT and ALM

Special tools and workshop equipment required

- Fault reader - V.A.G 1551-

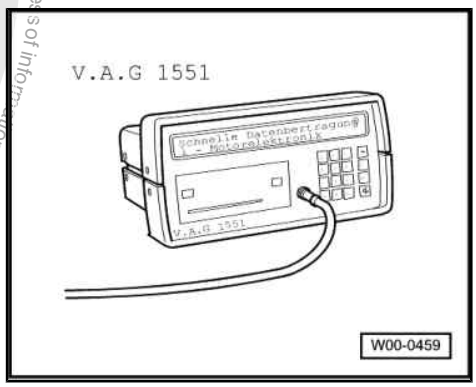

- Adapter cable - V.A.G 1551/3 A-

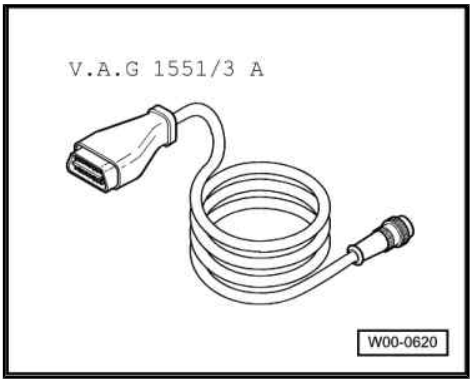

Protected by copyright. Copyright by Volkswagen AG. Volkswagen AG does not guarantee or accept any liability with respect to the correctness of information in this document. Copyright by Volkswagen AG. Volkswagen AG. Volkswagen AG, in part or in whole, is not permitted unless authorised by Volkswagen AG. Copyright for private or commercial purposes, in part or in whole, is not permitted unless authorised by Volkswagen AG.
satelettronica

♦ Ignition tester - V.A.G 1767 -

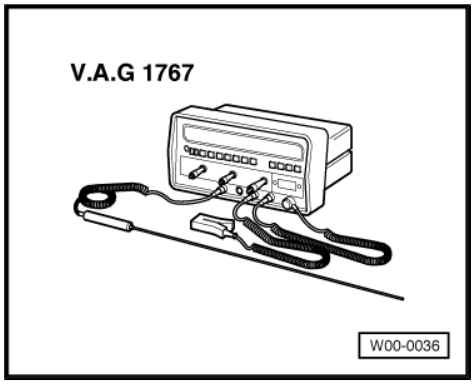

or

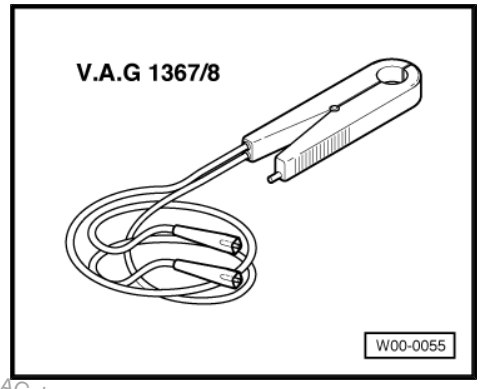

Protected by copyright. Copying for private or commercial purposes, in part or in whole, is not permitted unless authorised by Volkswagen AG. Volkswagen AG does not guarantee or accept any liability with respect to the correctness of information in this document. Copyright by Volkswagen AG.

satelettronica

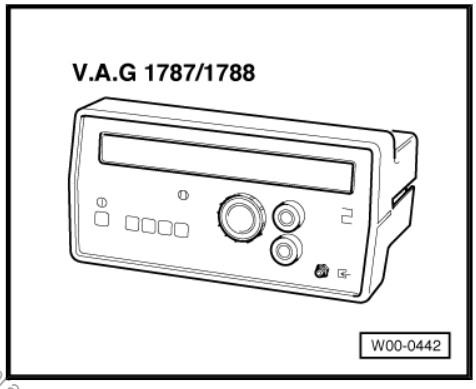

- Ignition tester - V.A.G 1367 -
- Trigger clamp - V.A.G 1367/8-
- 4-component exhaust emission tester - V.A.G 1787-

or

- 4-component exhaust emission tester - V.A.G 1788-
- ⇒ Data sheets for exhaust emissions test

Procedure

Note

- *Before attaching the inductive sender on vehicles with engine code AEE, a spacer (6 mm thick) must be fitted onto the inductive sender, otherwise it will be damaged.*
- *All test conditions and data required for emissions test ⇒ Data sheets for exhaust emissions test*
- *The CO content is regulated to specification by the lambda regulation. Faults in the lambda regulation are detected in self-diagnosis and stored in fault memory.*
- *Faults identified (engine electronics) when fault memory is read must be rectified and the fault memory then cleared.*
- *To prevent injuries to personnel and/or damage to ignition and injection system, the ignition system wiring (including high voltage wiring) should be connected and disconnected only with ignition switched off.*

Carrying out visual check of components influencing emissions

⇒ Data sheets for exhaust emissions test

– Performing visual check for:

- Installation
- Completeness
- Leakage
- Damage

Note

Faults found are to be rectified.

Connecting test units

– Apply handbrake.

– Automatic gearbox: Move selector lever to position “P” or “N”.

– Manual gearbox: gear lever in neutral.

Connect -V.A.G 1551- with ignition switched off ⇒ page 20

Protected by copyright. Copyright by Volkswagen AG.
Copyright by Volkswagen AG. Volkswagen AG does not guarantee or accept any liability with respect to the correctness of information in this document.
Copyright by Volkswagen AG. Reproduction not permitted unless authorised by Volkswagen AG.
satelettronica

– Connect ignition tester - V.A.G 1367- or ignition tester - V.A.G 1367/8- using trigger clamp - V.A.G 1767- with ignition switched off.

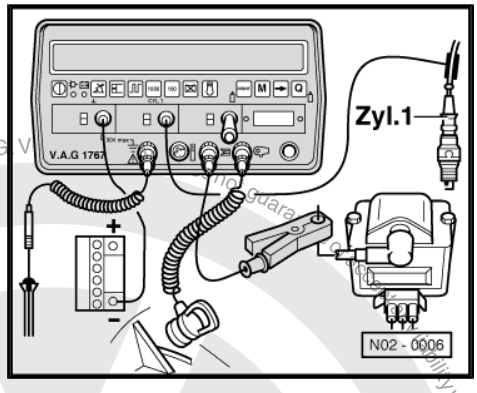

Note

Before attaching the inductive sender on vehicles with engine code AEE, a spacer (6 mm thick) must be fitted onto the inductive sender, otherwise it will be damaged.

– Connect CO-tester - V.A.G 1363 A- or: 4-component exhaust emission tester - V.A.G 1787- or: 4-component exhaust emission tester - V.A.G 1788 (D)- to sampling pipe.

Carry out following procedure:

– Start engine and run it at idling speed.

– Check idling speed and CO content (not adjustable).

If actual figures deviate from specifications: Carry out repair measures!

On -V.A.G 1551- :

Indicated on display:

```
V.A.G - SELF DIAGNOSIS HELP
1 - Rapid data transfer
```

or

```
V.A.G - SELF DIAGNOSIS HELP
2 - Flash code output
```

Appears alternately

– Press button 1 to select “Rapid data transfer” mode.

Indicated on display:

```
Rapid data transfer HELP
Enter address word XX
```

– Press buttons 0 and 1 for address word “Engine electronics” and confirm entry with Q button.

– Press → button.

Indicated on display:

```
Rapid data transfer HELP
Select function XX
```

– Press buttons 0 and 8 for function “Read measured value block” and confirm entry with Q button.

Indicated on display:

```
Read measured value block HELP
Enter display group number XXX
```

– Press buttons 0; 0 and 1 for “Display group number 001” and confirm entry with Q button.

Indicated on display: (1…4 = Display zones)

```
Read measured value block 1 ->
 1 2 3 4
```

Only continue with test when in 4th display zone -8-digit number block- 00000000 is displayed.

Protected by copyright. Copying for private or commercial purposes, in part or in whole, is not permitted unless authorised by Volkswagen AG. V
Copyright by Volkswagen AG. No guarantee or liability with respect to the correctness of information in this document.
satelettronica

Note

If at one or more positions a 1 is displayed in display zone 4, the test conditions have not been fulfilled.

– Allow engine to idle for at least 1 minute.
– Check ignition timing.
– If necessary adjust ignition timing by turning distributor.

On -V.A.G 1551- :

– Press [→] button.

Indicated on display:

```
Rapid data transfer HELP
Select function XX
```

– Press buttons [0] and [6] for function “End data transfer” and confirm entry with [Q] button.

If actual figures deviate from specifications: Carry out repair measures!

Note

- *Reconnect all hoses and connections that have been disconnected or separated for checking and adjusting purposes.*
- *Operate assemblies e.g. power assisted steering, automatic gearbox, air conditioning system and check that the engine operates smoothly under these load conditions.*

5.1.3 Engine codes AEH, AKK, AKL, ANW, APE, APF, AQQ, AUA, AUD and AUR

Special tools and workshop equipment required

- Fault reader - V.A.G 1551-

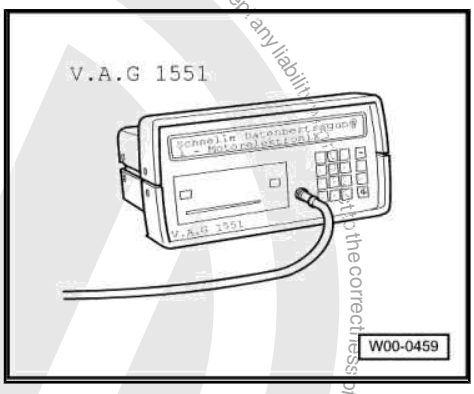

Protected by copyright. Copying for private or commercial purposes, in part or in whole, is not permitted unless authorised by Volkswagen AG. Volkswagen AG does not guarantee or accept any liability with respect to the correctness of information in this document. Copyright by Volkswagen AG.
satelettronica

Protected by copyright. Copying for private or commercial purposes, in part or in whole, is not permitted unless authorised by Volkswagen AG. Volkswagen AG does not guarantee or accept any liability with respect to the correctness of information in this document. Copyright by Volkswagen AG.

- Adapter cable - V.A.G 1551/3 A-

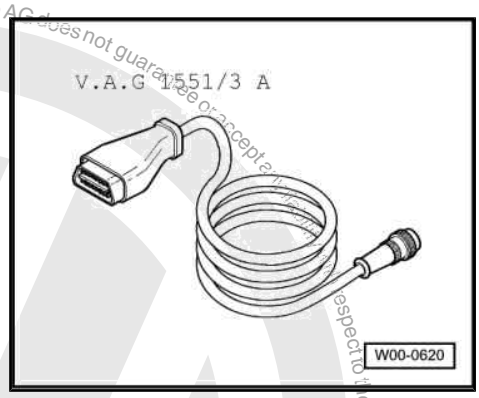

- 4-component exhaust emission tester - V.A.G 1787-

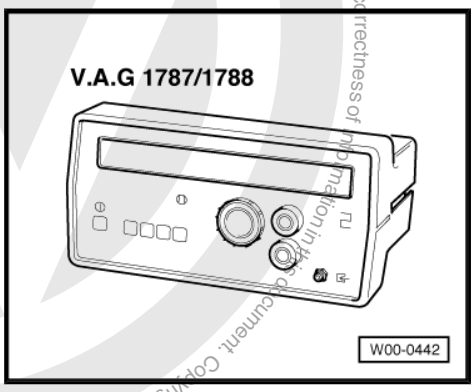

or

- 4-component exhaust emission tester - V.A.G 1788-
- ⇒ Data sheets for exhaust emissions test

Procedure

Note

- *All test conditions and data required for emissions test ⇒ Data sheets for exhaust emissions test*
- *Idling speed and CO content not adjustable.*
- *The CO content is regulated to specification by the lambda regulation. Faults in the lambda regulation are detected in self-diagnosis and stored in fault memory.*
- *Faults identified (engine electronics) when fault memory is read must be rectified and the fault memory then cleared.*
- *To prevent injuries to personnel and/or damage to ignition and injection system, the ignition system wiring (including high voltage wiring) should be connected and disconnected only with ignition switched off.*

Carrying out visual check of components influencing emissions

⇒ Data sheets for exhaust emissions test

– Performing visual check for:

- Installation
- Completeness
- Leakage
- Damage

satelettronica

Note

Faults found are to be rectified.

Connecting test units

– Apply handbrake.

– Automatic gearbox: Move selector lever to position “P” or “N”.

– Manual gearbox: gear lever in neutral.

Connect -V.A.G 1551- with ignition switched off ⇒ page 20

– Connect CO-tester - V.A.G 1363 A- or: 4-component exhaust emission tester - V.A.G 1787- or: 4-component exhaust emission tester - V.A.G 1788 (D)- to sampling pipe.

Carry out following procedure:

– Start engine and run it at idling speed.

On -V.A.G 1551- :

Indicated on display:

```
V.A.G - SELF DIAGNOSIS HELP
1 - Rapid data transfer
```

or

```
V.A.G - SELF DIAGNOSIS HELP
2 - Flash code output
```

Appears alternately

– Press button 1 to select “Rapid data transfer” mode.

Indicated on display:

```
Rapid data transfer HELP
Enter address word XX
```

– Press buttons 0 and 1 for address word “Engine electronics” and confirm entry with Q button.

– Press → button.

Indicated on display:

```
Rapid data transfer HELP
Select function XX
```

– Press buttons 0 and 8 for function “Read measured value block” and confirm entry with Q button.

Indicated on display:

```
Read measured value block HELP
Enter display group number XXX
```

– Press buttons 0; 0 and 1 for “Display group number 001” and confirm entry with Q button.

Indicated on display: (1…4 = Display zones)

```
Read measured value block 1 ->
 1 2 3 4
```

Do not continue with check until 80°C appears in display zone 2.

– Check idling speed in display zone 1.

– Allow engine to idle for at least 1 minute.

– Read CO content on exhaust gas tester.

– Press → button.

Indicated on display:

```
Rapid data transfer HELP
Select function XX
```

– Press buttons 0 and 6 for function “End data transfer” and confirm entry with Q button.

Protected by copyright. Copying for private or commercial purposes, in part or in whole, is not permitted unless authorised by Volkswagen AG. Volkswagen AG does not guarantee or accept any liability with respect to the correctness of information in this document. Copyright by Volkswagen AG.
satelettronica

Volkswagen AG. Volkswagen AG does not guarantee or accept any liability with respect to the correctness of information in this document. Copyright by Volkswagen AG. Protected by copyright. Copying for private or commercial purposes, in part or in whole, is not permitted unless authorised by Volkswagen AG.

If actual figures deviate from specifications: Carry out repair measures!

Note

- *Reconnect all hoses and connections that have been disconnected or separated for checking and adjusting purposes.*
- *Operate assemblies e.g. power assisted steering, automatic gearbox, air conditioning system and check that the engine operates smoothly under these load conditions.*

5.2 Exhaust emissions test for vehicles with petrol engine without OBD with emissions testing station - VAS 6300-

Special tools and workshop equipment required

- Exhaust emissions station - VAS 6300-

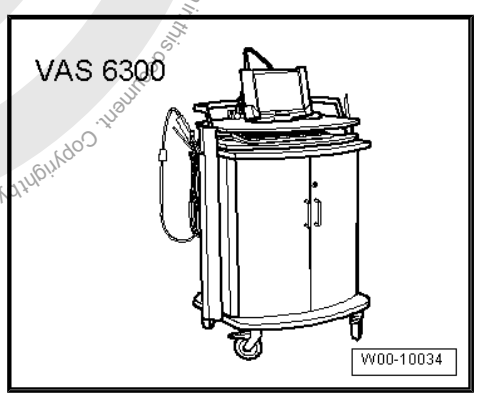

- OBD adapter cable - VAS 5052/16-
- ⇒ Data sheets for exhaust emissions test

Note

- *It is only possible to carry out an exhaust emissions test when all units of the exhaust emissions station - VAS 6300- are connected properly and combined with each other according to the operating instructions.*
- *All work to be performed is displayed by the exhaust emissions station - VAS 6300- .*

Conditions for testing

- All test conditions and data required for emissions test ⇒ Data sheets for exhaust emissions test
- For bar code reading the EET data sheet must be printed out.
- Automatic gearbox: selector lever in position “P” or “N”.
- Manual gearbox: gear lever in neutral
- Parking brake applied

– Perform exhaust emissions test according to instructions on display.

satelettronica

Protected by copyright. Copying for private or commercial purposes, in part or in whole, is not permitted unless authorised by Volkswagen AG. Volkswagen AG does not guarantee the accuracy, completeness and timeliness of the information in this document. Copyright by Volkswagen AG.

Initial screen

– Select button -arrow- `Exhaust emissions test`.

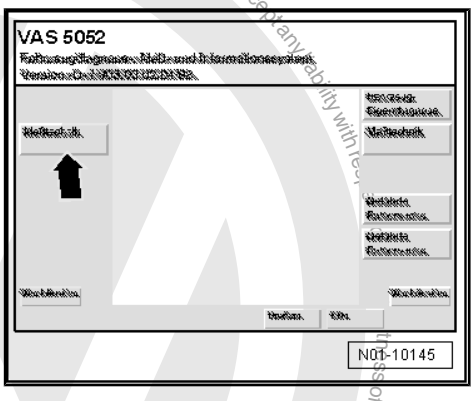

An overview is displayed to select the respective EET type.

– Select `EET petrol` -arrow-.

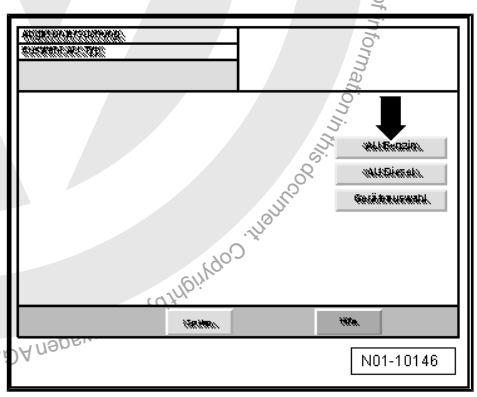

The display for warm-up phase appears.

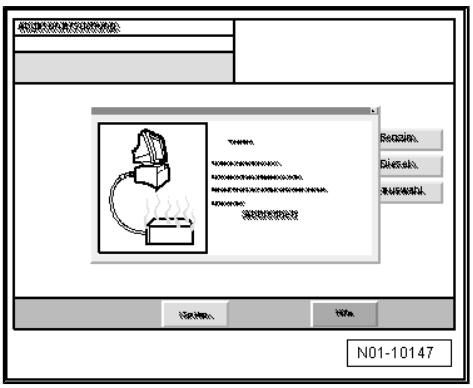

satelettronica

– Continue exhaust emissions test according to instructions on display.

– If the EET specification selection is displayed, select respective “EET specification selection” -arrow-.

♦ When exhaust emissions test is performed for the first time, either select “Standard values”,

♦ Or “Last vehicle” when an exhaust emissions test is to be carried out again.

– Select Continue on display, see -item 1-.

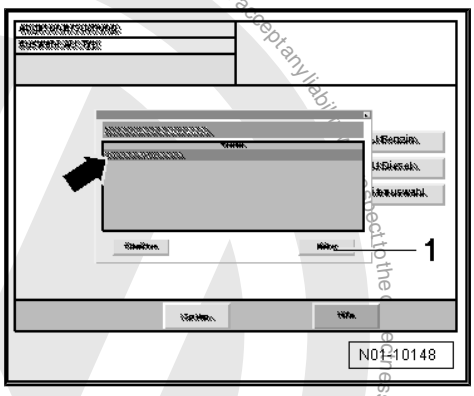

Vehicle data input

The vehicle data input menu is displayed.

Note

♦ *For new models the document previously known as the vehicle registration document is now called the vehicle registration certificate part 1.*

♦ *For new models the document previously known as the vehicle log book is now called the vehicle registration certificate part 2.*

Protected by copyright. Copyright by Volkswagen AG.
Volkswagen AG does not guarantee or accept any liability with respect to the correctness of information in this document. Copyright by Volkswagen AG.
Reproduction, in part or whole, is not permitted unless authorised by Volkswagen AG. Volkswagen AG does not guarantee or accept any liability
satelettronica

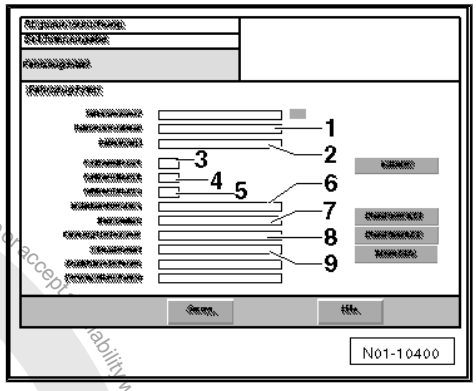

- -1- Vehicle manufacturer: “e.g. VOLKSWAGEN - VW”
- -2- Vehicle type: “e.g. Golf”
- -3- Key number for 1: “e.g. 11”
- -4- Key number for 2: “e.g. 0603” (vehicle registration document)
- -4- Key number for 2.1 (code for 2): “e.g. 0603” (vehicle registration certificate part 1)
- -5- Key number for 3: “e.g. 358” (vehicle registration document)
- -5- Key number for 2.2 (code for D2): “e.g. 358” (vehicle registration certificate part 1)
- -6- Engine code “e.g. AQY”
- -7- Registration number: “e.g. WOB-HH 1234”
- -8- Vehicle identification number: “e.g. WVWZZZ1JZYW123456”

– Enter mileage at -item 9- “e.g. 32000”.

Note

- *Further functions can be called up using GoTo button.*
- *The test can be terminated using GoTo button.*

Specified data input for EET

Note

- *If specifications are not available as bar code, they are to be entered manually.*
- *All test conditions and data required for emissions test ⇒ Data sheets for exhaust emissions test*

Manual specified data input for EET:

– Perform manual data input according to instructions on display.

Protected by copyright. Copyright by Volkswagen AG. Volkswagen AG does not guarantee or accept any liability with respect to the correctness of information in this document. Copyright by Volkswagen AG. Volkswagen AG. Volkswagen AG does not authorised use for commercial purposes, part in models not permitted or in other or private or commercial purposes.

satelettronica

– Enter displayed values on EET data sheet in column “Test values for exhaust emissions test” on display as follows:

1 - Test speed (idling speed)

2 - Warm-up phase for catalytic converter

3 - Engine temperature

4 - Increased idling speed

5 - CO content at increased idling speed

6 - Lambda at increased idling speed

7 - Idling speed

8 - Select type of control circuit test -item 1-. After selecting the basic procedure, note the different methods to activate disturbance variable ⇒ page 149 .

9 - Lambda probe value

– When all data have been entered properly, press button ▶ -arrow- to continue.

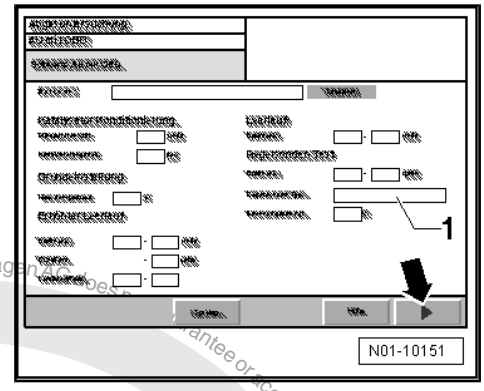

Specified data input for EET as bar code:

– If specified data for EET are available as bar code, read bar code of EET data sheet with bar code reader.

All data required are shown on display.

– Press ▶ button -arrow- to proceed.

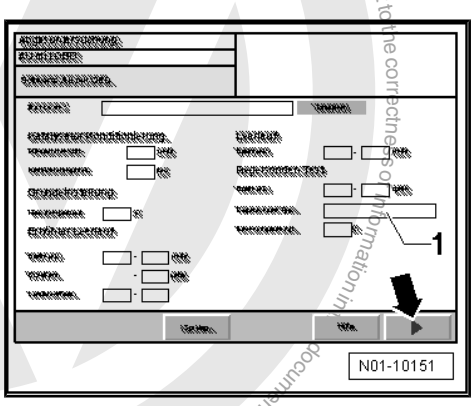

Inspection

– Follow instructions on display:

– Perform visual check.

– If visual check is OK, press OK button -arrow-

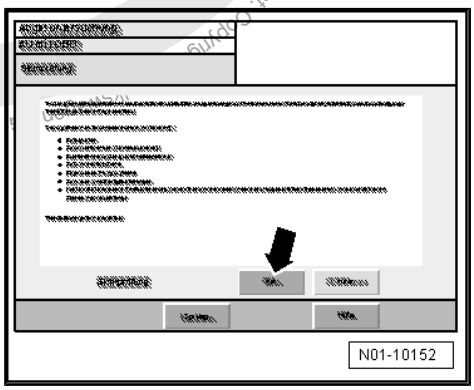

Note

When not OK *button is pressed a check will be carried out*

The visual check is displayed with the request to connect the diagnostic connector.

– Follow instructions on display:

– Switch off ignition.

– Connect adapter for older vehicles - VAS 5051/2- or engine speed adapter - VAS 5087/- to the vehicle.

– Switch ignition on.

Protected by copyright. Copying for private or commercial purposes, in part or in whole, is not permitted unless authorised by Volkswagen AG. Volkswagen AG does not guarantee or accept any liability with respect to the correctness of information in this document. Copyright by Volkswagen AG.

satelettronica

– Follow instructions on display, see -arrow C- and -arrow A-.- -

– Start engine.

– Insert emission probe into exhaust tail pipe.

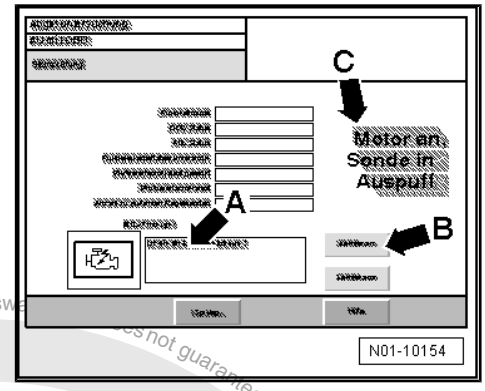

Note

The exhaust emissions test is only continued when the test probe is in the exhaust tail pipe.

It is automatically switched to test for readiness of operation.

Catalytic converter conditioning

It is automatically switched to warm-up phase of catalytic converter.

– Follow instructions on display:

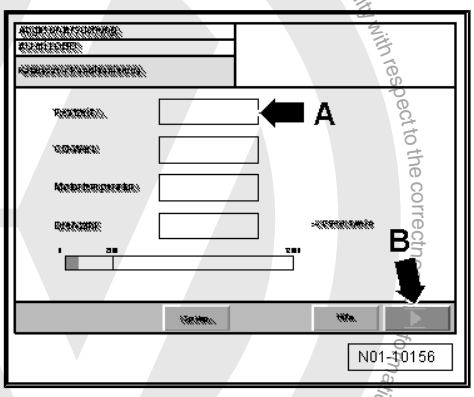

Measurement starts when the engine speed has reached the required level.

– Maintain engine speed in required engine speed range.

The remaining time to carry out the warm-up phase -arrow A- is displayed.

Warm-up phase

It is automatically switched to display for measuring engine temperature.

– Follow instructions on display:

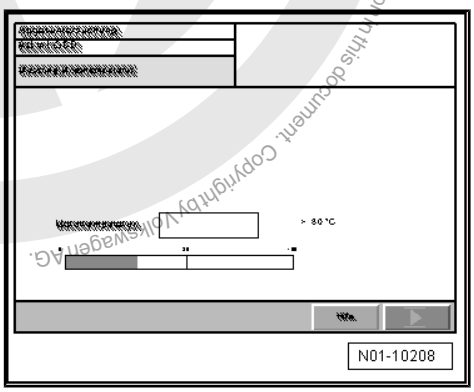

Note

This is only indicated on display if engine temperature has not reached 80°C.

– Bring engine to required temperature.

Protected by copyright. Copying for private or commercial purposes, in part or in whole is not permitted unless authorised by Volkswagen AG. Volkswagen AG does not guarantee or accept any liability with respect to the correctness of information in this document. Copyright by Volkswagen AG.
satelettronica

Measurement at increased idling speed:

It is automatically switched to display for measuring increased idling speed.

– Follow instructions on display:

Measurement starts when the engine speed has reached the required level.

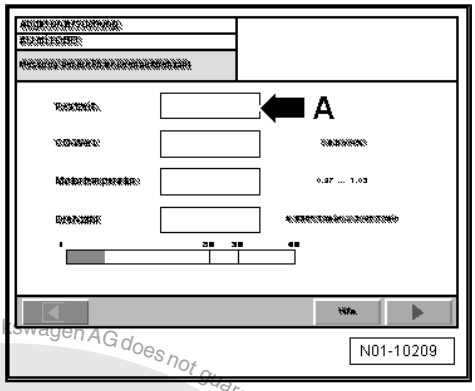

Note

- *Measurement can be skipped using ▶ button, i.e. the exhaust emissions test has failed.*
- *Measured values are reset using ← button, and the test can be repeated.*

– Maintain engine speed in required engine speed range.

The remaining time to perform measurement is displayed -arrow A-.- -

Measuring idling speed and CO content

It is automatically switched to display for measuring the idling speed and CO content.

Measurement starts when the engine speed has reached the required level.

The remaining time to perform measurement is displayed -arrow A-.- -

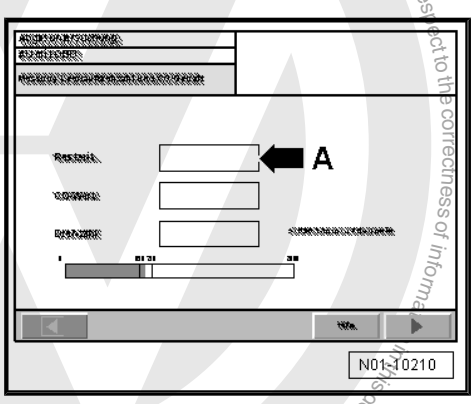

Lambda control circuit test

For basic procedure a disturbance variable must be activated ⇒ page 149 .

Evaluation

When the exhaust emissions test is performed, the log is shown on display.

The test result is displayed.

Now remarks concerning the exhaust emissions test can be entered -arrow A-. They will then be included in the test log.

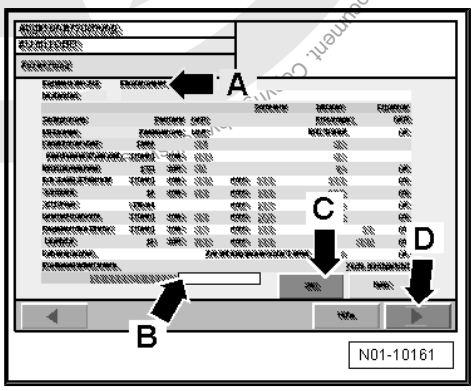

– When the exhaust emissions test is classed as passed, select `EET sticker issued` and the date from drop-down menu -arrow B-.

– Then confirm with `Yes`, see -arrow C-.

– Then press ▶ button -arrow D-.

Protected by copyright. Copying for private or commercial purposes, in part or in whole, is not permitted unless authorised by Volkswagen AG. Volkswagen AG does not guarantee or accept any liability with respect to the correctness of information in this document. Copyright by Volkswagen AG.
satelettronica

After confirming, the two “TEST CERTIFICATES” are printed out automatically.

– Follow instructions on display:

– Take emission probe out of exhaust tail pipe.

– Then press ▶ button -arrow B-.

The exhaust emissions test is completed, a new exhaust emissions test can be performed.

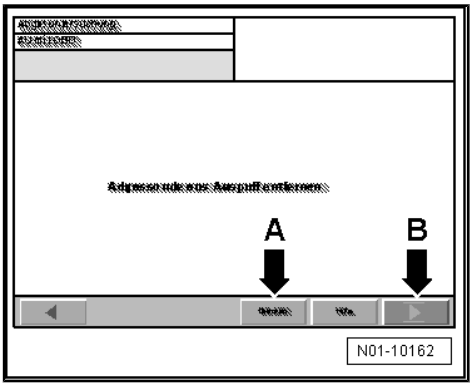

5.2.1 Methods to activate disturbance variable at lambda control circuit test

Procedure according to engine codes

ADZ and 1F	⇒ page 149
AEE, AEX, AKK, AKV, ALM, ANW, ANX and APQ	⇒ page 149
AEH, APF and AKL	⇒ page 150
AFT	⇒ page 150
APE	⇒ page 151
AQQ	⇒ page 151

Engine codes ADZ and 1F

– Activate disturbance variable within 60 seconds as follows:

– Pull vacuum hose off injection part towards intake air preheating temperature selector -arrow-

The control unit must recognise the disturbance variable and eliminate through regulation within 60 seconds.

– Reconnect vacuum hose.

The control unit must recognise deactivation of the disturbance variable and eliminate through regulation within 60 seconds.

The control circuit test is also completed when the disturbance variable has been recognised only in one direction.

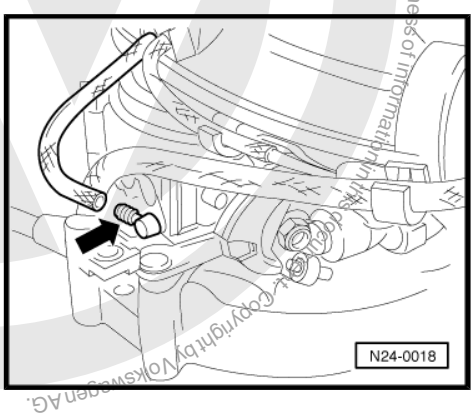

Engine codes AEE, AEX, AKK, AKV, ALM, ANW, ANX and APQ

– Activate disturbance variable within 60 seconds as follows:

Protected by copyright. Copying for private or commercial purposes, in part or in whole, is not permitted unless authorised by Volkswagen AG. Volkswagen AG does not guarantee or assume any liability with respect to the correctness of information. Copyright by Volkswagen AG.
satelettronica

– Pull 4-pin connector -1- off coolant temperature sender -2-.

The control unit must recognise the disturbance variable and eliminate through regulation within 60 seconds.

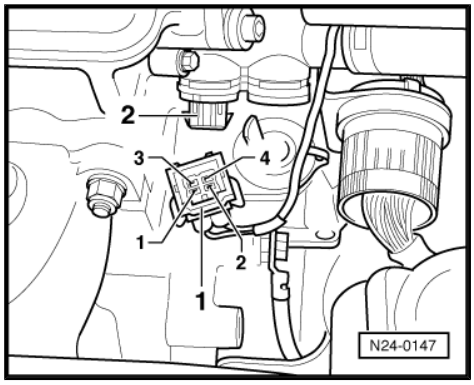

Note

The throttle valve must not be operated during the test, otherwise the disconnected connector will be recognised as fault by the self-diagnosis and stored in the fault memory.

– Reconnect 4-pin connector.

Note

When connecting the connector always ensure that it is fitted properly and engages noticeably.

The control unit must recognise deactivation of the disturbance variable and eliminate through regulation within 60 seconds.

The control circuit test is also completed when the disturbance variable has been recognised only in one direction.

Engine codes AEH, APF and AKL

– Activate disturbance variable within 60 seconds as follows:

– Pull connector -1- off coolant temperature sender -2-.

The control unit must recognise the disturbance variable and eliminate through regulation within 60 seconds.

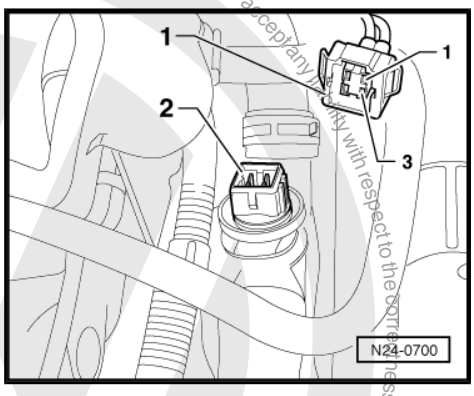

– Deactivate the disturbance variable immediately as follows:

– Fit coolant temperature sender connector.

Note

When connecting the connector always ensure that it is fitted properly and engages noticeably.

The control unit must recognise deactivation of the disturbance variable and eliminate through regulation within 60 seconds.

The control circuit test is also completed when the disturbance variable has been recognised only in one direction.

Engine code AFT

– Activate disturbance variable within 60 seconds as follows:

Protected by copyright. Copying for private or commercial purposes, in part or in whole, is not permitted unless authorised by Volkswagen AG. Volkswagen AG does not guarantee or accept any liability with respect to the correctness of information in this document. Copyright by Volkswagen AG.
satelettronica

– Pull vacuum hose -arrow- off fuel pressure regulator and seal. Wait 20 seconds.

– The control circuit test is initiated.

– Open vacuum hose.

The control unit must recognise the disturbance variable and eliminate through regulation within 60 seconds.

– Reconnect vacuum hose on fuel pressure regulator

The control unit must recognise deactivation of the disturbance variable and eliminate through regulation within 60 seconds.

The control circuit test is also completed when the disturbance variable has been recognised only in one direction.

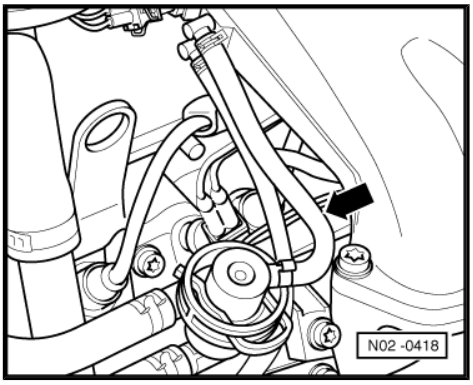

Engine code APE

– Activate disturbance variable within 60 seconds as follows:

– Pull 4-pin connector off coolant temperature sender - G62- with coolant temperature sender - G2- -arrow-.

The control unit must recognise the disturbance variable and eliminate through regulation within 60 seconds.

– Deactivate the disturbance variable as follows:

– Reconnect connector on coolant temperature sender - G62- .

The control unit must recognise deactivation of the disturbance variable and eliminate through regulation within 60 seconds.

The control circuit test is also completed when the disturbance variable has been recognised only in one direction.

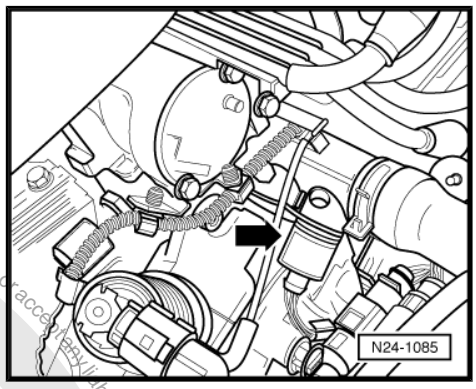

Engine code AQQ

– Activate disturbance variable within 60 seconds as follows:

– Pull 4-pin connector off coolant temperature sender - G62- with coolant temperature sender - G2- -arrow-.

The control unit must recognise the disturbance variable and eliminate through regulation within 60 seconds.

– Deactivate the disturbance variable as follows:

– Reconnect connector on coolant temperature sender - G62- .

The control unit must recognise deactivation of the disturbance variable and eliminate through regulation within 60 seconds.

The control circuit test is also completed when the disturbance variable has been recognised only in one direction.

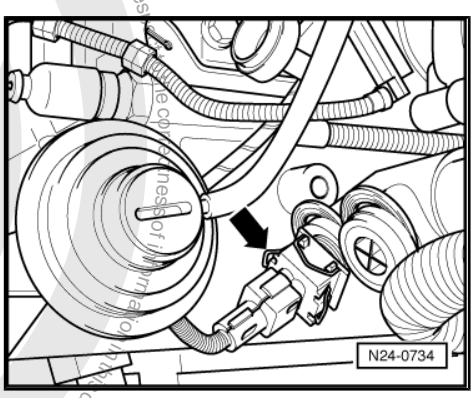

5.3 Exhaust emissions test for vehicles with petrol engine and OBD

Special tools and workshop equipment required

♦ Exhaust gas testing station L - VAS 7320 A-

Protected by copyright. Copying for private or commercial purposes, in part or in whole, is not permitted unless authorised by Volkswagen AG. Volkswagen AG does not guarantee or accept any liability with respect to the correctness of information in this document. Copyright by Volkswagen AG.
satelettronica

Note

- *The following description refers to vehicles fitted with "On-board diagnosis" OBD.*
- *The OBD monitors all components and part systems influencing the exhaust emissions quality.*
- *It is possible to carry out an exhaust emissions test only when all units of the emissions testing station are connected properly and joined to each other according to the operating instructions.*
- *All work to be performed is displayed by the emissions testing station .*

Conditions for testing

- All test conditions and data required for exhaust emissions test are found on EET data sheet for the respective engine.
- For bar code reading the EET data sheet must be printed out.
- Automatic gearbox: selector lever in position "P" or "N".
- Manual gearbox: gear lever in neutral
- Parking brake applied
- 12V battery fully charged (if battery charge is too low, raise idling speed if necessary).

– Perform exhaust emissions test according to instructions on display.

Vehicle data input

– Enter the following data:

- Registration number
- Key numbers
- Vehicle identification number
- Fuel type
- Mileage

The following vehicle data can be found in the vehicle registration certificate part 1:

- Registration number: "e.g. WOB-HH 1234"
- Emission key number "Field 14.1 (code for field 14)"
- Vehicle manufacturer: "Field 2", "Field 2.1 (code for field 2)"
- Vehicle identification number "field E"
- Type and version "Field D2 (type only)", "Field 2.2 (code for field D.2)"

Specified data input for EET

There are different ways to enter the specified data:

- 1. By manual input
- 2. By bar code input from EET data sheet
- 3. Through ELSA web service

Protected by copyright. Copying for private or commercial purposes, in part or in whole, is not permitted unless authorised by Volkswagen AG. Volkswagen AG does not guarantee or accept any liability with respect to the correctness of information in this document. Copyright by Volkswagen AG.
satelettronica

Note

- *To use the ELSA web service, the exhaust gas testing station L which is used for the exhaust emissions test must be integrated in the workshop network.*
- *The ELSA web service automatically transmits the data for the specific vehicle via the network to the respective mask.*

Manual specified data input for EET:

Note

All test conditions and data required for exhaust emissions test can be found in the ⇒ Data sheets for exhaust emissions test for respective engine.

– Perform manual data input according to instructions on display.

– Enter displayed values on EET data sheet in column “Test values for exhaust emissions test” on display as follows:

1 - Test speed (idling speed)

2 - Warm-up phase for catalytic converter

3 - Engine temperature

4 - Increased idling speed

5 - CO content at increased idling speed

6 - Lambda at increased idling speed

7 - Idling speed

8 - Select regulating probe type; either “Step-type probe” or “Broad-band probe”.

9 - Lambda probe value

Specified data input for EET as bar code:

– If specified data for EET are available as bar code, read bar code of EET data sheet with bar code reader.

All data required are shown on display.

Inspection

– Inspect all exhaust emissions relevant components.

– Check if exhaust system is fitted and complete and check for leaks and damage.

Procedure

– Follow instructions from exhaust gas testing station .

5.4 Exhaust emissions test for diesel engines without OBD

Exhaust emissions test with diesel tester V.A.G. 1743
⇒ page 154

Exhaust emissions test with emissions testing station VAS 6300
⇒ page 160

Protected by copyright. Copying for private or commercial purposes, in part or in whole, is not permitted unless authorised by Volkswagen AG. Volkswagen AG does not guarantee or accept any liability with respect to the correctness of information in this document. Copyright by Volkswagen AG.

satelettronica

Protected by copyright. Copyright by Volkswagen AG. Volkswagen AG does not guarantee or accept any liability with respect to the correctness of information in this document. Copyright by Volkswagen AG.

5.4.1 Exhaust emissions test with diesel tester V.A.G. 1743

Special tools and workshop equipment required

- Test equipment trolley - V.A.G 1700-
- Diesel tester - V.A.G 1743-

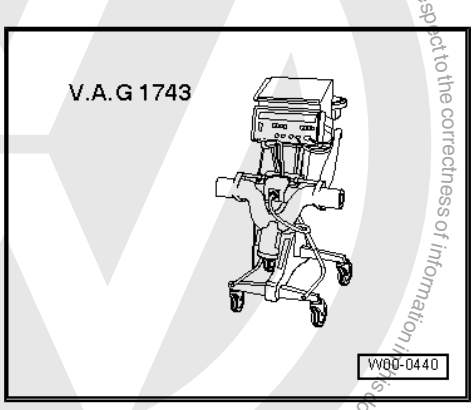

- Data reader - V.A.G 1798-
- ⇒ Data sheets for exhaust emissions test

Test sequence

Note

- *All test conditions and data required for emissions test ⇒ Data sheets for exhaust emissions test*
- *If possible, the test should be completed outdoors following a road test. If this is not possible for various reasons (weather, excessive noise in residential areas), then the test can be carried out in a workshop.*
- *To reduce noise levels, the bonnet should be closed on first catch during tests.*

Carrying out visual check of components influencing emissions

⇒ Data sheets for exhaust emissions test

– Performing visual check for:

- Installation
- Completeness
- Leakage
- Damage

Note

Faults found are to be rectified.

satelettronica

Connecting test units

– Connect diesel tester - V.A.G 1743- according to operating instructions.

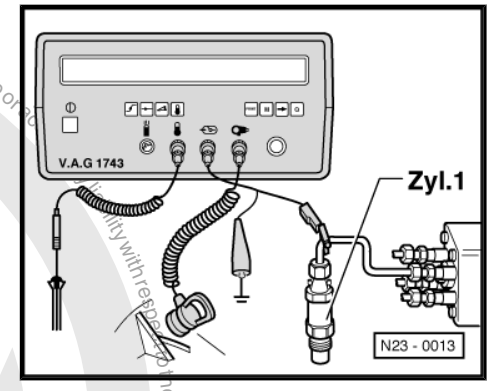

Description, measuring process, function, setting up and operation see ⇒ V.A.G 1743 operating instructions

Test sequence

– Start engine and run it at idling speed.

– Press F2 button for “EET diesel” on data reader.

Carry out exhaust emissions test according to instructions on diesel tester display.

If this message appears on the display:

```
Please insert vehicle identity card!!
Manual input with -> button
```

– Enter vehicle identification data from vehicle identification document using keyboard as follows (press Return button after each entry).

Vehicle data input:

Note

- *For new models the document previously known as the vehicle registration document is now called the vehicle registration certificate part 1.*
- *For new models the document previously known as the vehicle log book is now called the vehicle registration certificate part 2.*

- -1- Vehicle manufacturer: “e.g. VOLKSWAGEN - VW”
- -2- Vehicle type: “e.g. Golf”
- -3- Key number for 1: “e.g. 11”
- -4- Key number for 2: “e.g. 0603” (vehicle registration document)
- -4- Key number for 2.1 (code for 2): “e.g. 0603” (vehicle registration certificate part 1)
- -5- Key number for 3: “e.g. 358” (vehicle registration document)
- -5- Key number for 2.2 (code for D2): “e.g. 358” (vehicle registration certificate part 1)
- -6- Engine code “e.g. AQY”
- -7- Registration number: “e.g. WOB-HH 1234”
- -8- Vehicle identification number: “e.g. WVWZZZ1JZYW123456”

– Enter odometer reading “e.g. 32000”.

– Confirm entry of vehicle identification data with Q button.

```
Check input with -> button
Continue with Q button
```

If this message appears on the display:

```
Read bar code
Manual input with -> button
```

satelettronica

– Enter specifications with bar code reader of data reader, to do this slide bar code reader over respective bar code of data sheets for exhaust emissions test.

or

– Carry out entry by hand following instructions on data reader display using [→] button.

– If this message appears on the display:

```
Check input with -> button
Continue with Q button
```

– Confirm vehicle data entered or read using [Q] button.

If this message appears on the display:

```
Visual check OK = y not OK = n
```

– Enter result of visual check.

If this message appears on the display:

```
F1 Temperature measurement with sensor
F2 Enter temp. measurement manually
```

– Press [F1] button for “Temperature measurement with sensor”.

– If engine oil temperature has reached 80°C, pull out measuring sensor and push dipstick in until stop.

– Continue test sequence by pressing the [Q] button.

If this message appears on the display:

```
Idling speed ->
Speed ACT. xxxx rpm SPEC. xxxx rpm
```

– Press [→] button.

Idling speed not in specified range for engine codes AEY, AFN, AHB, AHU, AGP, AGR, AKW, ALE, ALH, AQM, ASK and AYQ

Note

The idling speed and maximum speed can be checked but not adjusted.

– If the values are not within specified range, a repair must be made.

Idling speed not in specified range for engine code 1Y

Protected by copyright. Copying for private or commercial purposes, in part or in whole, is not permitted unless authorised by Volkswagen AG. Volkswagen AG does not guarantee or accept any liability with respect to the correctness of information in this document. Copyright by Volkswagen AG.

satelettronica

– To adjust idling speed, turn adjustment screw -1-.

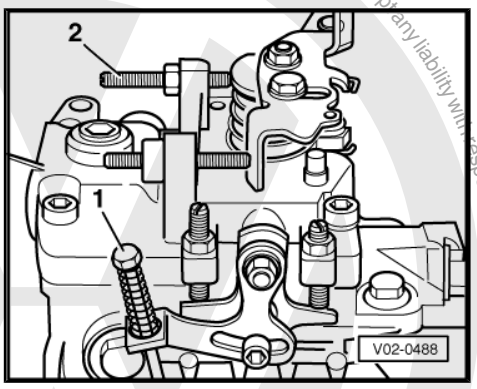

Continuation for all engine codes

– Continue test sequence by pressing the Q button.

If this message appears on the display:

```
Rev limit 5 sec
Speed ACT. xxxx rpm SPEC. xxxx...xxxx rpm
```

– Depress accelerator pedal fully and hold for specified time.

> ⚠ **WARNING**
>
> ***If the rev limit is exceeded, lift off accelerator pedal immediately and adjust rev limit to specification or perform repair measures.***

If this message appears on the display:

```
Rev limit ->
Speed ACT. xxxx rpm SPEC. xxxx...xxxx rpm
```

– Release accelerator pedal.

– Check actual figures, to do this switch further the actual display using → button.

Rev limit not in specified range for engine codes AEY, AFN, AHB, AHU, AGP, AGR, AKW, ALE, ALH, AQM, ASK and AYQ

Note

Governed speed can be checked but not adjusted.

– If the values are not within specified range, a repair must be made.

Governed speed not in specified range for engine code 1Y

Protected by copyright. Copying for private or commercial purposes, in part or in whole, is not permitted unless authorised by Volkswagen AG. Volkswagen AG does not guarantee or accept any liability with respect to the correctness of information in this document. Copyright by Volkswagen AG.
satelettronica

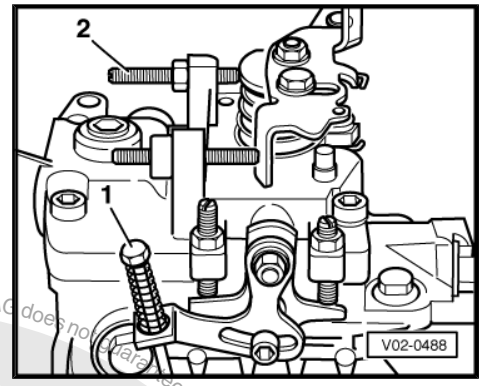

– Adjust lock nut of adjustment screw -2-.

– Lock adjustment screw.

Continuation for all engine codes

– Continue test sequence by pressing the Q button.

If this message appears on the display:

```
Idling speed 1st measurement 15 sec
Speed ACT. xxxx rpm SPEC. xxx...xxxx rpm
```

The data reader accepts the actual figures within 15 seconds.

If this message appears on the display:

```
Data transfer to diesel tester
 Depress accelerator quickly
```

– Depress accelerator pedal fully and hold.

Indicated on display:

```
Data transfer to diesel tester
 Neutral accel. running
```

– Continue to depress and hold accelerator pedal.

If this message appears on the display:

```
Idling speed 2nd measurement 15 sec
Speed ACT. xxxx rpm SPEC. xxx...xxxx rpm
```

– Release accelerator pedal.

The data reader accepts the actual figures within 15 seconds.

If this message appears on the display:

```
Data transfer to diesel tester
 Depress accelerator quickly
```

– Depress accelerator pedal fully and hold.

Indicated on display:

```
Data transfer to diesel tester
 Neutral accel. running
```

– Continue to depress and hold accelerator pedal.

If this message appears on the display:

```
Idling speed 3rd measurement 15 sec
Speed ACT. xxxx rpm SPEC. xxx...xxxx rpm
```

– Release accelerator pedal.

The data reader accepts the actual figures within 15 seconds.

If this message appears on the display:

```
Data transfer to diesel tester
 Depress accelerator quickly
```

– Depress accelerator pedal fully and hold.

Indicated on display:

```
Data transfer to diesel tester
 Neutral accel. running
```

– Continue to depress and hold accelerator pedal.

Protected by copyright. Copyright by Volkswagen AG.
Copyright by Volkswagen AG. Volkswagen AG does not guarantee or accept any liability with respect to the correctness of information in this document. Copyright by Volkswagen AG. Volkswagen AG does not permit unless authorised by Volkswagen AG. Volkswagen AG does not guarantee or accept any liability with respect to the correctness of information in this document. Copyright by Volkswagen AG.
satelettronica

If this message appears on the display:

```
Idling speed 4th measurement 15 sec
Speed ACT. xxxx rpm SPEC. xxx...xxxx rpm
```

– Release accelerator pedal.

The data reader accepts the actual figures within 15 seconds.

If this message appears on the display:

```
Data transfer to diesel tester
 Depress accelerator quickly
```

– Depress accelerator pedal fully and hold.

Indicated on display:

```
Data transfer to diesel tester
 Neutral accel. running
```

– Continue to depress and hold accelerator pedal.

If this message appears on the display:

```
Highest opacity figure ->
ACT. x.xx rpm SPEC. x...x.xx rpm
```

– Release accelerator pedal.

– Press [→] button.

If this message appears on the display:

```
Average opacity figure ->
ACT. x.xx rpm SPEC. x...x.xx rpm
```

– Press [→] button.

If this message appears on the display:

```
Opacity band width ->
ACT. x.xx rpm SPEC. x...x.xx rpm
```

– Press [→] button.

If this message appears on the display:

```
Test OK Continue with Q button
Repeat test with F1 button
```

– Press [Q] button.

If the following is indicated on display: Press [F1] button and repeat test or carry out repair measures.

```
Test not OK Continue with Q button
Repeat test with F1 button
```

If this message appears on the display:

```
Enter remarks with -> button
Continue with Q button
```

– Enter remarks if necessary after pressing the [→] button.

– Press [Q] button.

If this message appears on the display:

```
Select tester / manual input F3
F1 XXXXX F2 XXXXX
```

– Select tester or enter name using [F1] to [F3] buttons.

– Press [Q] button, wait for log print-out.

Protected by copyright. Copying for private or commercial purposes, in part or in whole, is not permitted unless authorised by Volkswagen AG. Volkswagen AG does not guarantee or accept any liability with respect to the correctness of information in this document. Copyright by Volkswagen AG.
satelettronica

Protected by copyright. Copying for private or commercial purposes, in part or in whole, is not permitted unless authorised by Volkswagen AG. Volkswagen AG does not guarantee or accept any liability with respect to the correctness of information in this document. Copyright by Volkswagen AG.

– Press ⇥ button.

– End exhaust emissions test by pressing F2 button.

5.4.2 Exhaust emissions test with emissions testing station VAS 6300

Caution

- *Observe "SAFETY AND DAMAGE AVOIDANCE PRECAUTIONS" in the operating instructions for VAS 6300.*

Note

The following description refers to vehicles not fitted with "On-board diagnosis", OBD.

Special tools and workshop equipment required

♦ Exhaust emissions station - VAS 6300-

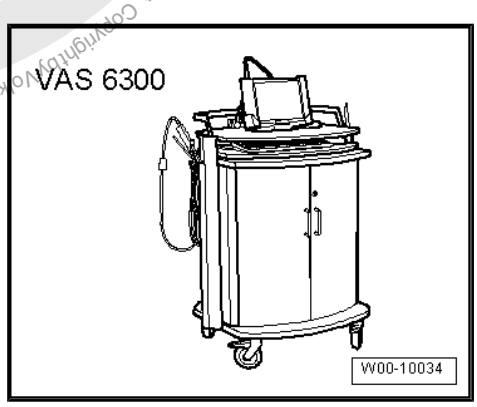

♦ OBD adapter cable - VAS 5052/16-

Note

♦ *It is only possible to carry out an exhaust emissions test when all units of the exhaust emissions station - VAS 6300- are connected properly and combined with each other according to the operating instructions.*

♦ *All work to be performed is displayed by the exhaust emissions station - VAS 6300- .*

Test prerequisites:

- All test conditions and data required for exhaust emissions test are found on EET data sheet for the respective engine.
- For bar code reading of specified data for EET, the EET data sheet must be printed out.
- Automatic gearbox: selector lever in position "P" or "N".
- Manual gearbox: gear lever in neutral
- Parking brake applied

– Perform exhaust emissions test according to instructions on display.

satelettronica

Initial screen:

– Select button “Exhaust emissions test” -arrow-.

An overview is displayed to select the respective EET type.

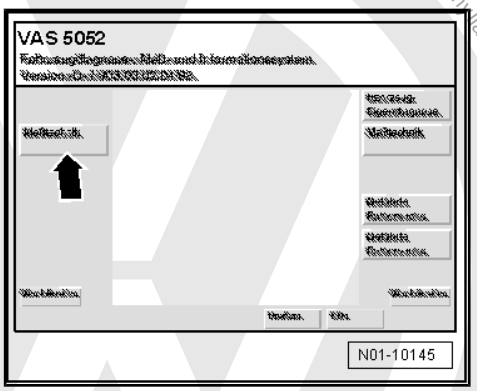

– Select “EET diesel” -arrow-.

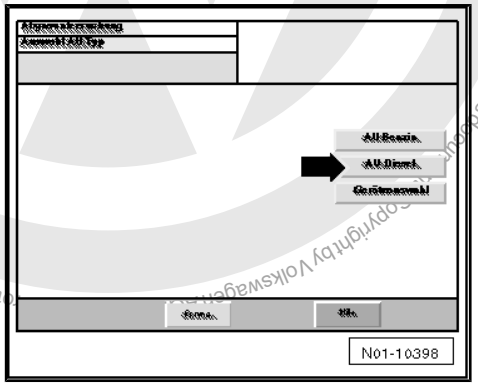

The display for warm-up phase appears.

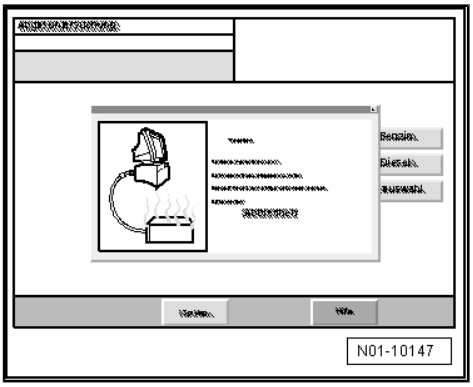

Protected by copyright. Copying for private or commercial purposes, in part or in whole, is not permitted unless authorised by Volkswagen AG. Volkswagen AG does not guarantee or accept any liability with respect to the correctness of information in this document. Copyright by Volkswagen AG.
satelettronica

– Continue exhaust emissions test according to instructions on display.

– If the EET specification selection is displayed, select respective “EET specification selection” -arrow-.

♦ When exhaust emissions test is performed for the first time, either select “Standard values”,

♦ Or “Last vehicle” when an exhaust emissions test is to be carried out again.

– Select “Continue” -item 1- on display.

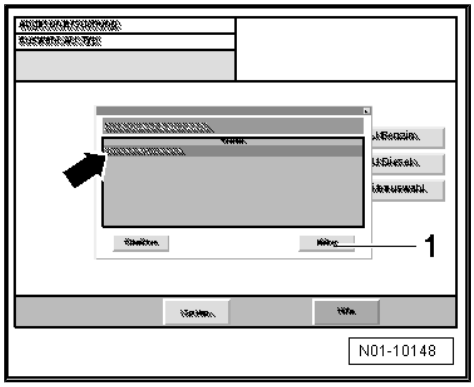

Vehicle data input:

The vehicle data input menu is displayed.

Note

♦ *For new models the document previously known as the vehicle registration document is now called the vehicle registration certificate part 1.*

♦ *For new models the document previously known as the vehicle log book is now called the vehicle registration certificate part 2.*

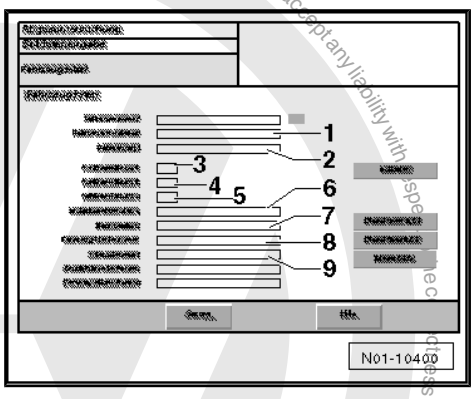

♦ -1- Vehicle manufacturer: “e.g. VOLKSWAGEN - VW”

♦ -2- Vehicle type: “e.g. Golf”

♦ -3- Key number for 1: “e.g. 11”

♦ -4- Key number for 2: “e.g. 0603” (vehicle registration document)

♦ -4- Key number for 2.1 (code for 2): “e.g. 0603” (vehicle registration certificate part 1)

♦ -5- Key number for 3: “e.g. 358” (vehicle registration document)

♦ -5- Key number for 2.2 (code for D2): “e.g. 358” (vehicle registration certificate part 1)

♦ -6- Engine code “e.g. AQY”

♦ -7- Registration number: “e.g. WOB-HH 1234”

♦ -8- Vehicle identification number: “e.g. WVWZZZ1JZYW123456”

– Enter odometer reading at -item 9- “e.g. 32000”.

Note

♦ *Further functions can be called up using* GoTo *button.*

♦ *The test can be terminated using* GoTo *button.*

Protected by copyright. Copyright by Volkswagen AG. Volkswagen AG does not guarantee or accept any liability with respect to the correctness of information in this document. Copyright by Volkswagen AG. Reproduction in whole or in part is not permitted unless authorised by Volkswagen AG. Copyright for private or commercial purposes, in part
satelettronica

– Select “diesel below 3.5t” or “diesel above 3.5t” -arrow-.

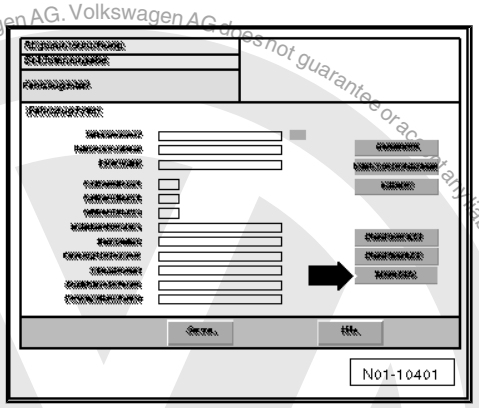

Specified data input for EET:

There are different ways to enter the specified data:

- 1. By manual input
- 2) By bar code input from EET data sheet
- 3) Through ELSA web service

Note

- *To use the ELSA web service, the VAS 5052 which is used for the exhaust emissions test, must be integrated in the workshop network.*
- *For the ELSA web service the vehicle specified data are automatically transmitted via the network to the respective mask.*

Manual specified data input for EET:

Note

All test conditions and data required for exhaust emissions test
⇒ Data sheets for exhaust emissions test for respective engine.

– Perform manual data input according to instructions on display.

– Enter displayed values on EET data sheet in column “Test values for exhaust emissions test” on display as follows:

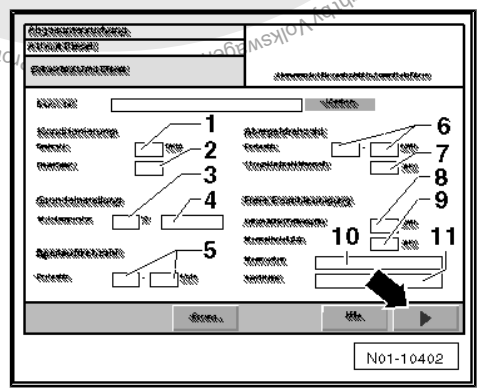

1 - Speed for conditioning

2 - Number of throttle bursts for conditioning

3 - Engine oil temperature (min. value)

4 - Select engine oil temperature measurement procedure

5 - Idling speed

6 - Governed speed

7 - Rev limit measuring period (1 second)

8 - Opacity figure (average)

9 - Select probe type (No. of probe)

10 - Select measuring mode

11 - Measured period portion

– When all data has been entered properly, press ⏎ button -arrow-.

Specified data input for EET as bar code:

– If specified data for EET are available as bar code, read bar code of EET data sheet with bar code reader.

Copyright by Volkswagen AG. Volkswagen AG does not guarantee or accept any liability with respect to the correctness of information in this document. Copyright by Volkswagen AG. Protected by copyright. Copying for private or commercial purposes, in part or in whole, is not permitted unless authorised by Volkswagen AG.
satelettronica

All required data is shown on display -1-.

– Press ⇨ button -arrow- to continue.

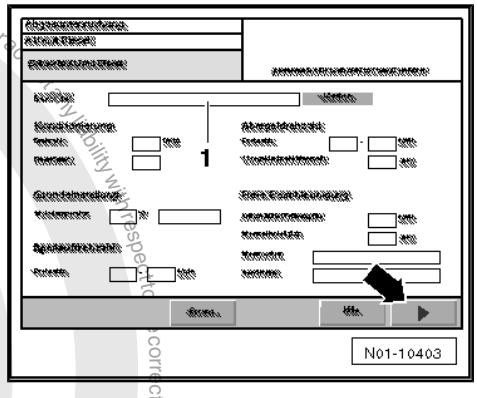

Visual inspection:

– Follow instructions on display:

– Perform visual check.

– If visual check is OK, press “OK” button -arrow-.

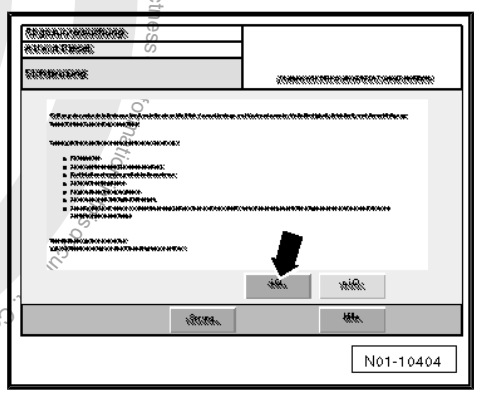

Note

Pressing "not OK" button causes a check to be carried out.

Connecting diagnostic connector:

- Ignition is switched off.

The visual check is displayed with the request to connect the diagnostic connector -arrow A-

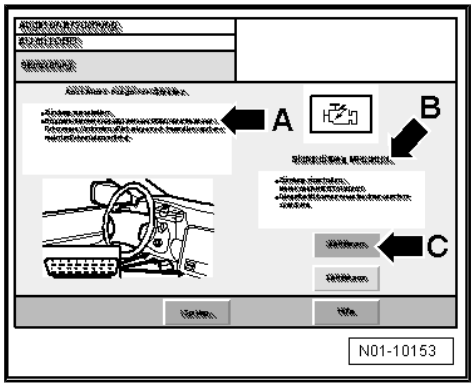

– Follow instructions on display -arrow A- and -arrow B-.

– Connect diagnosis cable connector to diagnostic connection.

Conditioning:

– Start engine.

In the conditioning phase the engine and, if necessary, the emission control systems are brought to operating temperature by throttle bursts and are prepared for the exhaust emissions test.

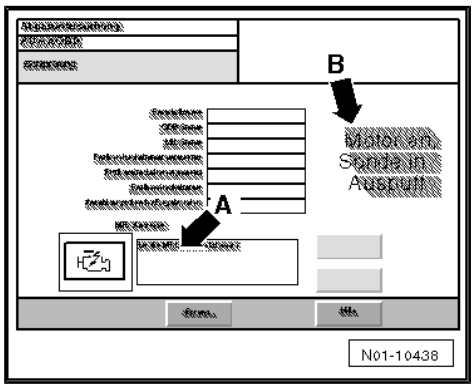

satelettronica

– Follow instructions on display:

– Maintain engine speed in required engine speed range.

If no conditioning is necessary, press → button -arrow- for the next measurement.

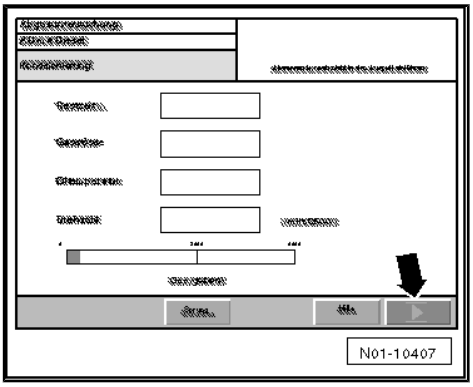

Measuring engine temperature:

It is automatically switched to display for measuring engine temperature.

– Follow instructions on display:

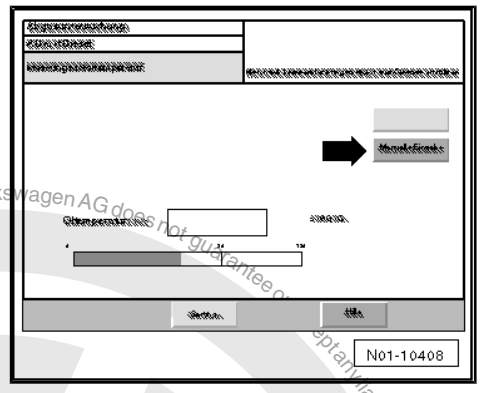

Note

- *This is only indicated on display if engine temperature has not reached 80°C.*
- *Do not insert emission probe into exhaust tail pipe.*
- *Using button "Alternative input" -arrow- other measured value inputs can be selected to measure the engine temperature. The measured value must then be entered by hand. At end of exhaust emissions test the measured value is marked by # in the evaluating mask and in the log print-out.*
- *The button "Alternative input" is only active, if previously a different method has been selected at specified data input for EET for "Engine oil measurement".*

Caution

Measuring the engine temperature is normally carried out via the oil temperature probe. The engine temperature must not be determined with engine running, otherwise the engine and probe could be damaged!

– Bring engine to required temperature.

Measuring idling speed:

It is automatically switched to display for measuring the idling speed.

Protected by copyright. Copying for private or commercial purposes, in part or entirely, is not permitted unless authorised by Volkswagen AG. Volkswagen AG does not guarantee or accept any liability with respect to the correctness of information in this document. Copyright by Volkswagen AG.
satelettronica

– Follow instructions on display:

Measurement starts when the engine speed has reached the required level.

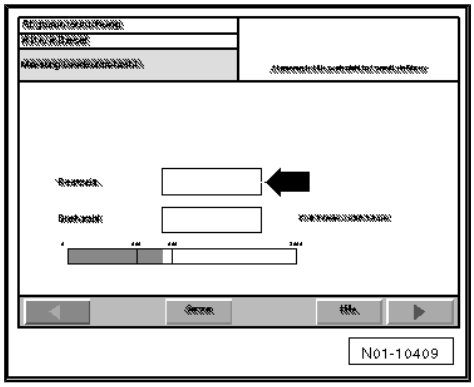

Note

- *Do not insert emission probe into exhaust tail pipe.*
- *The measurement can be skipped by pressing the button, i.e. the exhaust emissions test has failed.*
- *Measured values are reset using button, and the test can be repeated.*

– Maintain engine speed in required engine speed range.

The remaining time to perform measurement is displayed -arrow-.

Measuring rev limit:

It is automatically switched to display for measuring rev limit.

Measurement starts when the engine speed has reached the required level.

– Operate throttle until the measurement is carried out. To do this, immediately depress accelerator pedal.

The remaining time to perform measurement is displayed -arrow-.

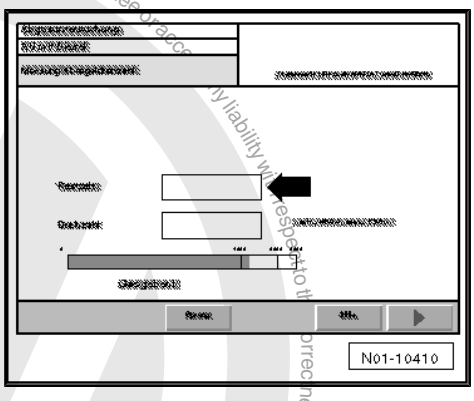

Note

- *Do not insert emission probe into exhaust tail pipe.*
- *The measurement can be skipped by pressing the button, i.e. the exhaust emissions test has failed.*

Air quality check:

An air quality check is carried out before starting the free acceleration. When doing this, no emission probe must be in the exhaust tail pipe. Otherwise measuring errors or faulty signals could occur during further measurements.

– When the air quality check is carried out, insert emission probe into exhaust tail pipe

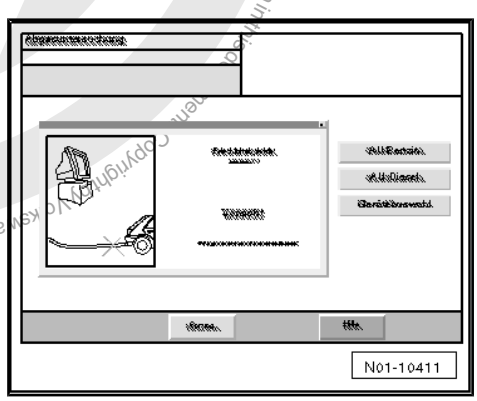

Free acceleration:

It is automatically switched to display for “Free acceleration”.

During “Free acceleration” the engine is revved up to rev limit without load as quickly as possible.

The “Free acceleration” test consists of at least four throttle bursts.

Free acceleration - phase 1:

Protected by copyright. Copyright by Volkswagen AG. Volkswagen AG does not guarantee or accept any liability with respect to the correctness of information in this document. Copying for private or commercial purposes, in part or in whole, is not permitted unless authorised by Volkswagen AG.

satelettronica

– Follow instructions on display -arrow A- and -arrow C-.

– Maintain idling speed in engine speed range indicated -arrow D-.

The remaining time to perform measurement is displayed -arrow B-.

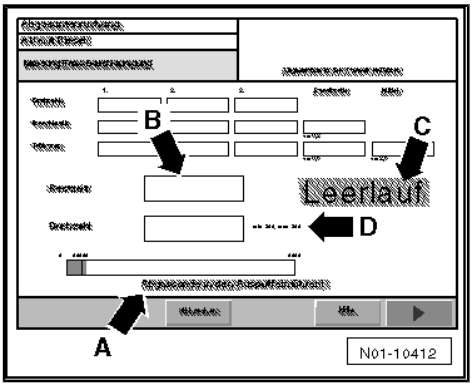

Note

- *The emissions probe must be in the exhaust tail pipe.*
- *If the speed deviates from engine speed range indicated, the measurement starts again.*
- *The measurement can be skipped by pressing the ⇥ button, i.e. the exhaust emissions test has failed.*

Free acceleration - phase 2:

– Follow instructions on display -arrow B-.

– Depress accelerator pedal fully when prompted and hold until the prompt for idling is shown on display.

Free acceleration - phase 3:

– Remove foot from accelerator pedal as soon as the prompt for idling is shown on display -arrow B- and run engine at idling speed.

The test results and information on the latest “Free acceleration” are shown on display -arrow A-. If the measured values are not OK, here you can obtain information why the “Free acceleration” has failed.

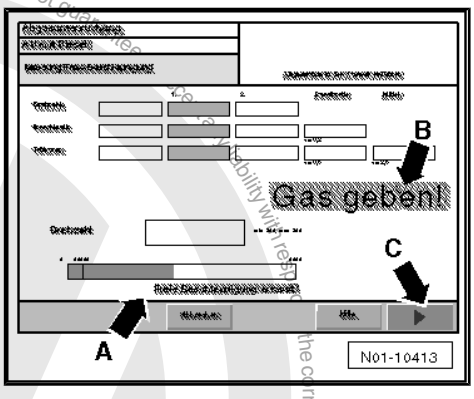

Note

- *If the field is coloured white the measured value is within tolerance.*
- *If the field is coloured red the measured value is outside tolerance.*
- *If the field is coloured yellow the measured value is outside tolerance, but can be assessed by the operator.*

Further throttle bursts:

– Follow instructions on display -arrow B-.

Now the next throttle burst follows, starting with phase 1 of “free acceleration”.

“Free accelerations” can be carried out until:

- three “free accelerations” have been completed in succession and the range of acceleration is OK.
- all values are OK, with the exception of range of acceleration, and the test is continued by pressing the ⇥ button -arrow C-. (In this case, the operator assesses if the value is OK).
- the values are not OK and the measurement is terminated/ skipped by pressing the ⇥ button -arrow C-.

If the measured values are OK after three throttle bursts in succession, i.e. all fields are coloured white, the exhaust emissions test is completed.

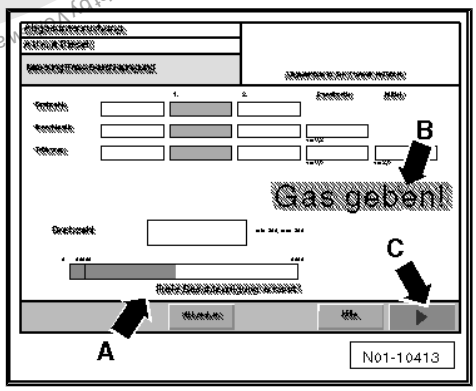

Protected by copyright. Copyright by Volkswagen AG. Volkswagen AG does not guarantee the correctness of information in this document. Copyright by Volkswagen AG.
satelettronica

Evaluation:

When the exhaust emissions test has been performed, the log is shown on display.

The test result is displayed.

Now remarks concerning the exhaust emissions test can be entered -arrow A-. They will then be included in the test log.

– When the exhaust emissions test is classed as passed, select “EET sticker issued” and the date from drop-down menu -arrow B-.

– Then confirm with “Yes” -arrow C-.

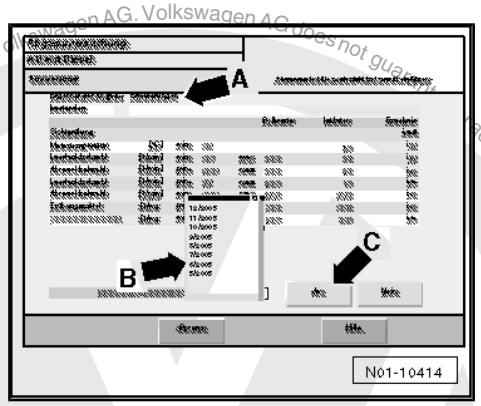

The exhaust emissions test log is shown on display and can be printed out as often as required in the menu “Print preview” using “Print” button -arrow A-.

– Press button “Close” -arrow B- to close the menu “Print preview ”.

– Follow instructions on display:

– Take emission probe out of exhaust tail pipe.

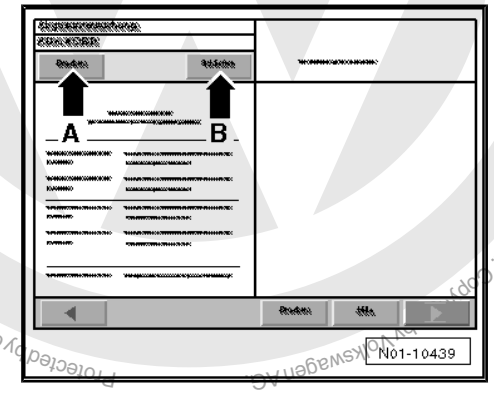

– Then press button -arrow B-.

The exhaust emissions test is completed, a new exhaust emissions test can be performed.

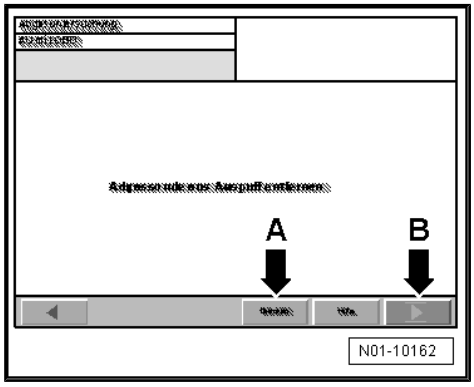

Protected by copyright. Copying for private or commercial purposes, in part or in whole is not permitted unless authorised by Volkswagen AG. Volkswagen AG does not guarantee or accept any liability with respect to the correctness of information in this document. Copyright by Volkswagen AG.
satelettronica

6 Glossary

These explanations only apply to “Maintenance Manual”. They are not necessarily generally valid!

Term	Explanation
ABS	(Anti-lock brake system); the ABS is a regulating system in the brake system, that prevents locking when braking. This helps to maintain directional stability and steerability.
ATF	(Automatic transmission fluid); gear oil for automatic gearboxes
ATF level	Filling level of ATF in gearbox
CO	(Carbon monoxide); is produced when fuels containing carbon are not combusted completely
CN	(Cetane number); measurement unit for ignition quality of diesel fuel
DIN	Deutsches Institut für Normung e.V (German Institute for Standardization)
Part no.	Abbreviation for part number
EN	European standard

Term	Explanation
EOBD	European On-Board Diagnosis
FAME	Fatty acid methyl ester
FSI	Fuel stratified injection
TFSI	Turbo fuel stratified injection
MIL	(Malfunction indicator light); American designation for exhaust emissions warning lamp K83
OBD	Onboard diagnosis, the OBD monitors all components influencing the exhaust emissions quality.
OBD-II	American onboard diagnosis
Unit injector	Unit injector for diesel engines
PR No.	Abbreviation for production control number. Identifies among other things optional equipment and country-specific deviations
PM	(Particulate matter); soot particulate value for diesel engine emissions
QG0	Vehicles are “not” factory-fitted with components for LongLife service. For maintenance, the intervals based on time and distance (non-flexible intervals) apply.

Term	Explanation
QG1	Vehicles are factory-fitted with active LongLife service. This means, vehicles have a flexible service interval display and are fitted with the following components: ♦ Flexible service interval display in dash panel insert ♦ Engine oil level sensor ♦ Brake lining wear indicator
QG2	The LongLife service is not factory-activated. This means that vehicles have a non-flexible service interval display (time and distance dependent service intervals) and are fitted with the following components: ♦ Non-flexible service interval display in dash panel insert ♦ Engine oil level sensor ♦ Brake lining wear indicator
Readiness code	8-digit binary code which indicates if all exhaust relevant diagnoses have been performed by the engine management.
RON	(Research octane number); measurement unit of the knock resistance of petrol

Copyright by Volkswagen AG. Volkswagen AG does not guarantee or accept any liability with respect to the correctness of information in this document. Copyright by Volkswagen AG. Protected by copyright. Copying, distribution and commercial use is not permitted, except with the express authorisation of Volkswagen AG. For private and commercial purposes, in part or in whole, only with the express authorisation of Volkswagen AG.
satelettronica

Term	Explanation
SAE	(Society of Automotive Engineers); society which creates proposals/guidelines for implementing legal requirements (e.g. standards).
SD	Naturally aspirated diesel engine
SDI	Naturally aspirated diesel engine - direct injection
TDI	Turbo diesel engine - direct injection
DP	Distributor injection pump
ULEV	Ultra low emission vehicle

Term	Explanation
ESI	Extended service interval
Common rail	Refers to a common high-pressure injection line (rail), which supplies all cylinders of the relevant cylinder bank with fuel.
LongLife service	The LongLife service enables extremely long inspection or oil change intervals, depending on individual driving style and conditions under which the vehicle is used. For the LongLife service a special engine oil is required.
Step-type probe	Also called finger probe (LPH lambda probe heating), (FLP flat lambda probe) or planar lambda probe. The voltage of the output signal of the lambda probe jumps rapidly. The lambda probe value is determined by a change in voltage. The probe is used as after catalytic converter probe.
Broad-band probe	Also called (ULP probe) universal lambda probe. The voltage of the output of the lambda probe nearly increases linear. The lambda probe value is determined by a change in voltage. This enables to measure the lambda probe value via a larger measuring range (broad band). The probe is used as before catalytic converter probe.
TPMS, TPLI	Tyre pressure monitoring, tyre monitor display

Protected by copyright. Copying for private or commercial purposes, in part or in whole, is not permitted unless authorised by Volkswagen AG. Volkswagen AG does not guarantee or accept any liability with respect to the correctness of information in this document. Copyright by Volkswagen AG.
satelettronica